FURUNO

Installation Manual
COLOR SCANNING SONAR
Model FSV-25 MARK-2/FSV-25S MARK-2

FURUNO ELECTRIC CO., LTD.

www.furuno.com

FURUNO ELECTRIC CO., LTD.

9-52 Ashihara-cho,
Nishinomiya, 662-8580, JAPAN

・FURUNO Authorized Distributor/Dealer

A : JAN. 2022
B1 : FEB. 07, 2023

Pub. No. IME-13690-B1

(TEHI) FSV-25-MARK-2

0001992451 2

SAFETY INSTRUCTIONS

The installer must read the safety instructions before attempting to install the equipment.

DANGER	Indicates a potentially hazardous situation which, if not avoided, will result in death or serious injury.
WARNING	Indicates a potentially hazardous situation which, if not avoided, could result in death or serious injury.
CAUTION	Indicates a potentially hazardous situation which, if not avoided, may result in minor or moderate injury.

Warning, Caution | Prohibitive Action | Mandatory Action

DANGER

Keep away from raise/lower shaft in hull unit when it is moving.

Gears will cause serious injury. In case of an emergency, press the **EMERGENCY STOP** button to stop the raising or lowering of the transducer.

Confirm that there is no person below the transducer before raising or lowering the transducer.

WARNING

Turn off the power at the mains switchboard before beginning the installation.

Fire, electrical shock or serious injury can result if the power is left on or is applied while the equipment is being installed.

Do not install the equipment where it may get wet from rain or water splash.

Water can cause fire or electrical shock, or damage the equipment.

WARNING

Do not open the equipment unless totally familiar with electrical circuits and service manual.

High voltage exists inside the equipment, and a residual charge remains in capacitors several minutes after the power is turned off. Improper handling can result in electrical shock.

Be sure no water leaks in at the hull unit.

Water leakage can sink the vessel. Also confirm that the transducer will not loosen by ship's vibration. The installer of the equipment is solely responsible for the proper installation of the equipment. FURUNO will assume no responsibility for any damage associated with improper installation.

If a steel tank is installed on a wooden or FRP vessel, take appropriate measures to prevent electrolytic corrosion.

Electrolytic corrosion can damage the hull.

Check the motor brake and drive shaft brake are functioning correctly before raising/lowering the transducer manually.

Do not remove the hull unit brake.

There is a risk of the shaft falling out.

⚠ DANGER

Install the specified transducer tank in accordance with the installation instructions. If a different tank is to be installed the shipyard is solely responsible for its installation, and it should be installed so the hull will not be damaged if an object strikes the tank.

The tank or hull may be damaged if the tank strikes an object.

Be sure to power each unit with proper voltage.

Connection of an improper power supply can cause fire or damage the equipment.

When checking the brake on the hull unit, always take measures against static electricity.

Static electricity can cause the unit to move unexpectedly, which can result in personal injury to damage to unit.

⚠ CAUTION

Maximum speed while the transducer is projected or being raised or lowered is as below, to prevent damage to the transducer.

Projected length	Projected	Raising/ Lowering
1100 mm or less	Max. 20 kn	Max. 14.5 kn
1100 to 1300 mm	Max. 18 kn	Max. 13.5 kn
Over 1300 mm	Max. 16 kn	Max. 12 kn

Ground the equipment to prevent electrical shock and mutual interference.

Observe the following compass safe distances to prevent interference to a magnetic compass:

Unit	Standard Compass	Steering Compass
Processor Unit	2.15 m	1.35 m
Control Unit	0.30 m	0.30 m
Sub Control Unit	0.90 m	0.55 m
Remote Controller	0.30 m	0.30 m

Confirm there are no foreign objects on the connecting cable terminals.

Foreign objects may cause the hull unit to move unintententionally.

SYSTEM CONFIGURATION

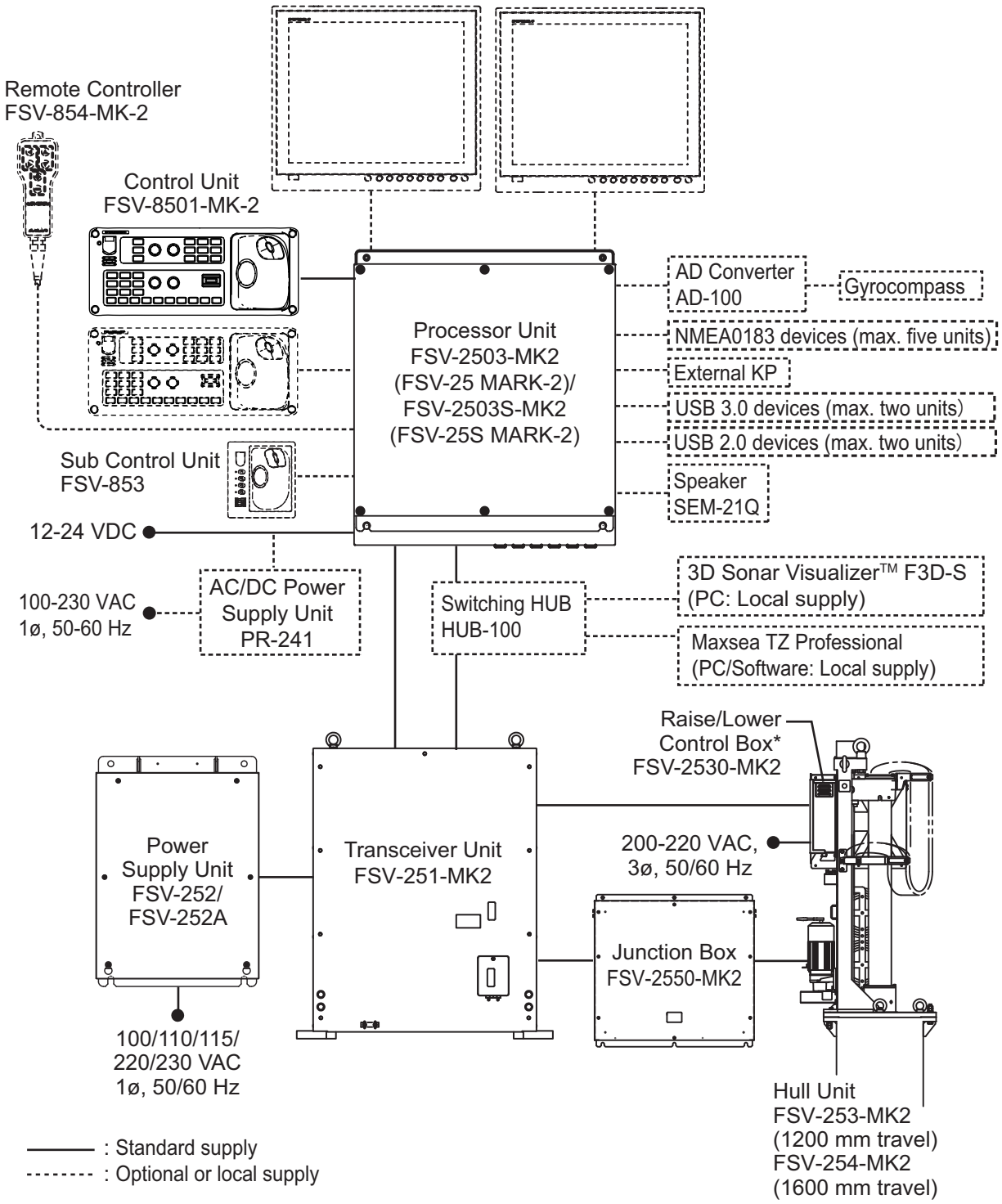

*: Use the optional control box extension box (FSV-2560) to extend the distance between the raise/lower control box and the hull unit.

EQUIPMENT LISTS

Standard supply

Name	Type	Code No.	Qty	Remarks	
Control Unit	FSV-8501-MK2	-	1	Cable length: 10 m	
Processor Unit	FSV-2503-MK2	-	1	For FSV-25 MARK-2	
	FSV-2503S-MK2	-		For FSV-25S MARK-2	
Transceiver Unit	FSV-251-MK2	-	1		
Power Supply Unit	FSV-252	-	1		
	FSV-252A	-			
Junction Box	FSV-2550-MK2	-	1		
Hull Unit	FSV-253-MK2	-	1	1200 mm travel	
	FSV-254-MK2	-		1600 mm travel	
Installation Materials	CP10-09600	000-036-274	1	For control unit	
	CP10-09700	000-036-275	1	For processor unit	
	CP10-09300	000-027-169	1	For transceiver unit	
	CP10-07701	001-267-450	1	For FSV-252	
	CP10-10601	001-636-160	1	For FSV-252A	
	CP10-09400	001-406-770	1	Cable between transceiver unit and junction box (S10-20-5/10/20)	5 m
	CP10-07800	001-267-540			10 m
	CP10-07900	001-267-550			20 m
	CP10-08300	001-025-069	1	For hull unit	
	CP10-08220	000-029-313	1	Cable between transceiver unit and raise/lower control box (10CA10053)	5 m
	CP10-08200	000-025-104			10 m
	CP10-08210	000-029-312			20 m
Spare Parts	SP26-00301	001-080-860	1	For processor unit	
	SP10-03901	001-268-990	1	For transceiver unit	
	SP10-04201	001-269-280	1	For raise/lower control box	

Optional supply

Name	Type	Code No.	Remarks	
Control Unit	FSV-8501-MK2	-		
Remote Controller	FSV-854-MK2	-		
Sub Control Unit	FSV-853	-		
Control Box Extension Box	FSV-2560	-	For remote installation of raise/lower control box	
AC/DC Power Supply Unit	PR-241	-		
External Loudspeaker	SEM-21Q	-		
Retraction Tank	OP10-40	001-269-630	For steel-hull vessels, 1300 mm	
Attachment Flange*	OP10-42	001-269-580	150 mm	
	OP10-38	001-269-590	200 mm	
	OP10-39	001-269-600	250 mm	
	OP10-43	001-269-610	280 mm	
	OP10-44	001-269-620	315 mm	
Attachment Kit*	OP10-24	006-943-530		
Data Recording Kit	OP10-49	000-029-217		
Calibration Ball	OP10-33	000-017-096	ϕ38.1	
	OP10-34	000-017-097	ϕ47.625	
Ferrite Core	OP86-11	001-594-450	For PR-241	
5-Pair Cable	10S2380 *10M*	001-196-330-10	Cable between processor unit and transceiver unit	10 m
	10S2380 *20M*	001-196-340-10		20 m
	10S2380 *30M*	001-196-350-10		30 m
	10S2380 *40M*	001-196-360-10		40 m
	10S2380 *50M*	001-196-370-10		50 m
	10S2380 *60M*	001-196-380-10		60 m
	10S2380 *100M*	001-196-390-10		100 m
Cable Assembly	HDMI-TO-DVI-L=5.3M	001-407-180	HDMI-DVI cable	5.3 m
	HDMI-TO-DVI-L=10.3M	001-407-170		10.3 m
	10CA10053 *5M*	001-408-440	Cable between transceiver unit and raise/lower control box	5 m
	10CA10053 *20M*	001-269-570		20 m
Installation Materials	CP10-10100	000-036-244	LAN cable between processor unit and transceiver unit	10 m
	CP10-10110	000-036-245		15 m
	CP10-10120	000-036-246		30 m
	CP10-10130	000-036-247		40 m
	CP10-10140	000-036-248		50 m
	CP10-10150	000-036-722		100 m
Flushmount Kit	FP03-09870	008-535-630	For FSV-853	
3D Sonar Visualizer	F3D-S	001-546-350	Software	
Operator's Manual	OMC-13442	000-196-805	For F3D-S	

*: Required when you install the hull unit to the existing retraction tank for the CSH-20 or FSV-24/30/35 hull unit on a steel hull.
- When tank length does not need to be extended, use the attachment kit.
- When tank length needs to be extended, use the attachment kit and attachment flange.

This page is intentionally left blank.

1. HOW TO INSTALL THE SYSTEM

1.1 Hull Unit

Note 1: The raise/lower control box on the hull unit contains a inertial measurement unit. Handle the unit carefully.

Note 2: Handle the transducer carefully. Rough handling can damage its sensitive components.

1.1.1 Installation considerations

Decide the location of the hull unit through consultation with the dockyard and ship owner. When deciding the location, the following points should be taken into account.

- Select an area where propeller noise, cruising noise, air bubbles and interference from turbulence are at a minimum. Generally, the point at 1/3 to 1/2 of the ship's length from the bow on the keel is optimum. On-the-keel installation is advantageous for minimizing oil consumption. For large ships with deep draft, the hull unit can be installed at the bow, along the keel line. (See figure below for reference.)

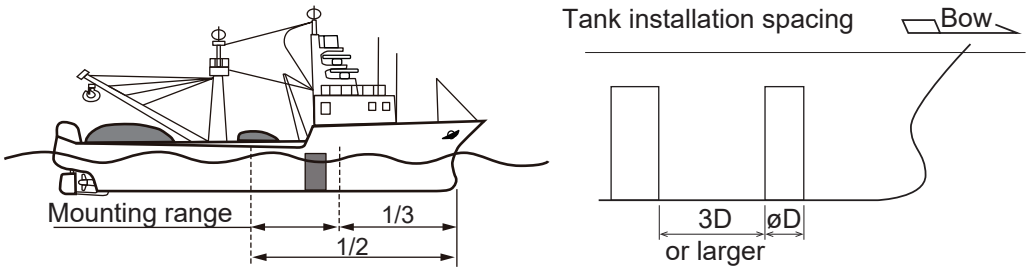

- For installations where there are other transducer tanks along the keel, install the hull unit a minimum distance of three times the internal diameter of the tank directly in front (bow direction) of the hull unit. Failure to install the hull unit with sufficient spacing can result in excessive vibrations caused by turbulence, which can damage the hull unit. (See figure above for reference.)
- No obstacle should be in the fore direction since it causes a shadow zone and aerated water, resulting in poor sonar performance.
- Select a place where interference from other transducers is minimal. The hull unit should be at least 2.5 m away from the transducers of other equipment.
- In the case of a bilge keel, select a location as far from the bilge as possible.
- Select a location away from indents and protrusions on the hull, especially indents, as they can create noise interference and cause poor sonar performance.
- The space shown in the figure on the next page is required around the hull unit for wiring and maintenance. If the ambient temperature around the unit will be below 0°C, provide the sonar compartment with a heater to keep the temperature above 0°C.

Note 1: After you install the hull unit, make sure you install anti-vibration stays. (See "How to install the stays (anti-vibration and anti-shock measures)" on page 1-5.)

Note 2: Prepare a secure and firm safety fence for the hull unit, to prevent accidental injury from the moving hull unit. The safety fence should be easily removable for maintenance and allow room for the connected cables to swing freely with pitch, roll and heave. The raise/lower control box and **EMERGENCY STOP** button should be installed and operatable from outside the safety fence.

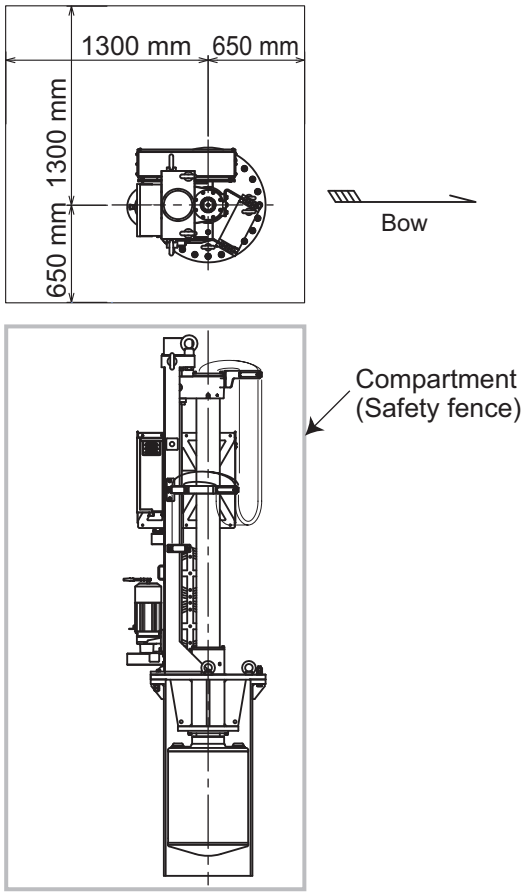

1.1.2 How to shorten the retraction tank

The default length for the retraction tank is 1300 mm. Shorten the tank as necessary so that the transducer positions well below the keel when it is fully lowered. The following table provides guidelines for shortening the tank. By removing only 88 mm from the retraction tank, you can eliminate the need for limit switch adjustment. Refer also to the retraction tank installation drawing at the back of this manual.

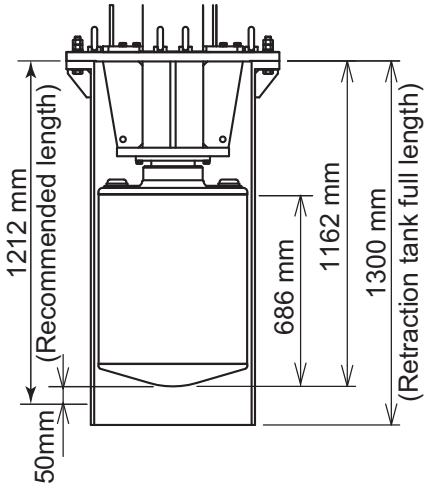

Hull unit travel	Cutting range	Recommended cutting length	Recommended tank length
1200 mm	0 to 1100 mm	88 mm	1212mm
1600 mm	0 to 1100 mm	88 mm	1212mm

Note: For both 1200 mm and 1600 mm travel hull units, the transducer will not fully retract unless the tank is shortened by more than 110 mm.

Guidelines for installation of the retraction tank

- If the keel plate on the inside of the hull is not adequate for installing the retraction tank, install a secondary keel plate.
- Install the retraction tank where the keel plate and hull frame intersect.

- If there is no suitable location where the hull frame and keel intersect, install suitable “T” shaped reinforcement ribs, then weld the base of the frame to the reinforcement ribs and the sides of the reinforcement ribs to the hull walls or other nearby reinforcement ribs. The reinforcement ribs should be secured in the fore, aft, port and starboard directions.
- Install the reinforcement ribs as near as possible to the top of the retraction tank, allowing 150 to 200 mm space for tightening of nuts and bolts.
- Fit a doubling plate (a plate added to another to give extra strength or stiffness) to the location where the retraction tank is welded to the hull bottom. While it is recommended that both sides attach to the hull, consult with the installer regarding length and diameter.
- The thickness for doubling plates and reinforcement ribs is 12 mm minimum.

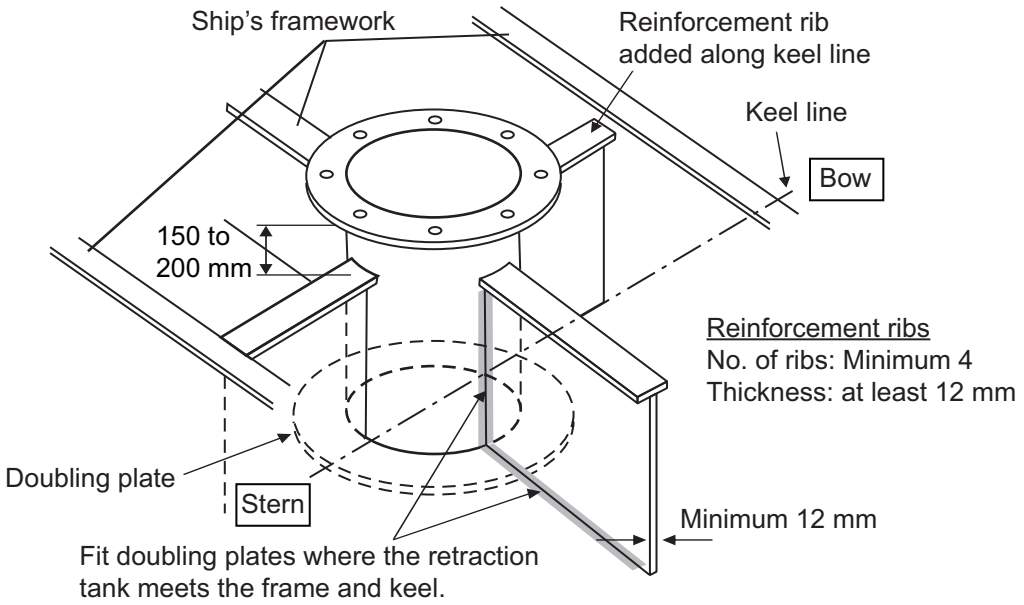

1.1.3 How to install the hull unit on the retraction tank

Weld the retraction tank and allow sufficient time for cooling. Install the hull unit as follows:

Prepare the materials and tools as shown below.

Name	Remarks
Screw wrench	M20 (opposite side 30 mm)
Ethyl alcohol	99.5%
Waste cloths	
Lithium grease	For O-ring and drive shaft, common lithium grease (the equivalent to Daphne Grease MP #2 (IDEMITSU KOSAN CO.,LTD))
Molytone grease	For gears and bearings, Molytone grease #2 (by SUMICO LUBRICANT CO., LTD)

Note: When retrofitting a CSH-20 or FSV-24/30/35 hull unit on a steel hull, see section 1.9.

1. Clean the flange and O-ring groove of the retraction tank (welded to hull) with ethyl alcohol moistened waste cloths.

2. Apply lithium grease to the O-ring and O-ring groove. Place the O-ring in its groove on the tank flange.
3. Orient the hull unit so that the bow mark (inscribed) on its flange points toward the ship's bow. Note that heading adjustment is required if the bow mark is not facing the ship's bow. (See section 3.5.)
4. Confirm the points as listed below, then place the hull unit on the tank.
   - Clean the flange platform.
   - Wipe the under-face of the hull unit with clean waste cloths.
   - Keep the O-ring in its groove.
5. Apply a slight amount of lithium grease to the threads of the hex bolts and stud bolts to prevent scorching, then secure the hull unit to the retraction tank, referring to the following figure.

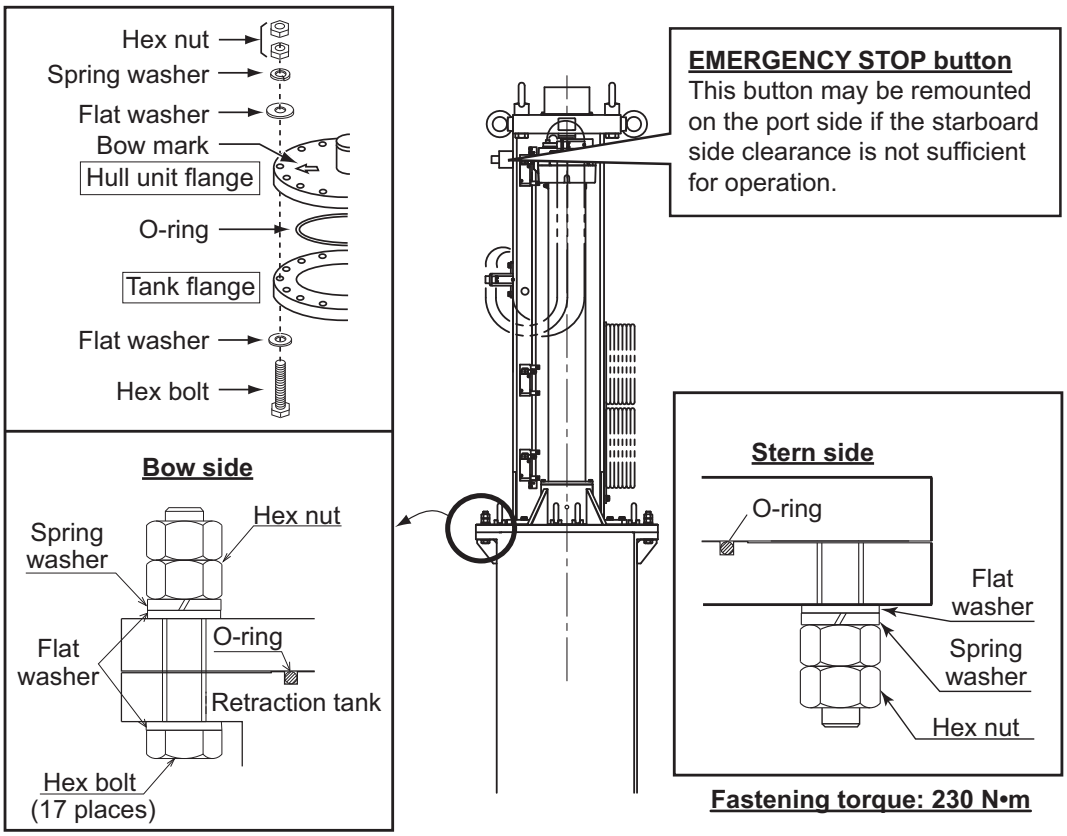

Fastening torque: 230 N•m

Fastening torque: 230 N•m

EMERGENCY STOP button

The **EMERGENCY STOP** button is attached to the starboard side of the hull unit. If the starboard side clearance is not sufficient for switch operation, the switch may be remounted on the port side.

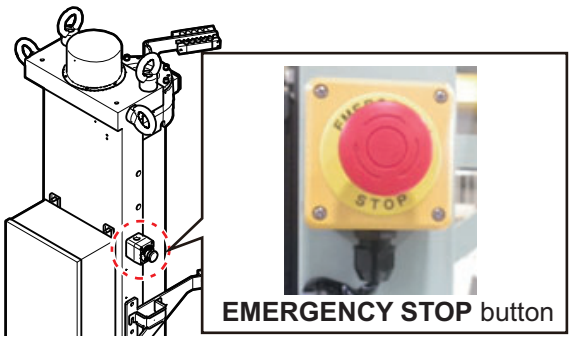

EMERGENCY STOP button

Note: The junction box (FSV-2550-MK2) cannot be mounted to the hull unit when the **EMERGENCY STOP** button is remounted on the port side. Mount the junction box to a bulkhead near the hull unit.

How to install the stays (anti-vibration and anti-shock measures)

This measure must be done after installing the hull unit to prevent damage from vibration or impact shock to the transducer. Stays should be as sturdy as possible (75×75×9 mm minimum recommended). Install a minimum of two stays, one in the aft direction, one in the fore direction. Where possible install two more stays (one in the port and one in the starboard direction), making a total of four stays. Where the hull units is installed off center from the bow-stern line, install the stays at right angles with the bow mark on the hull unit.

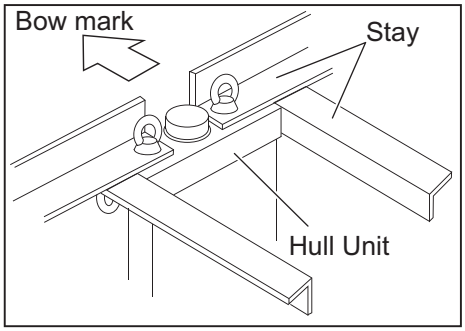

Recommended stay installation

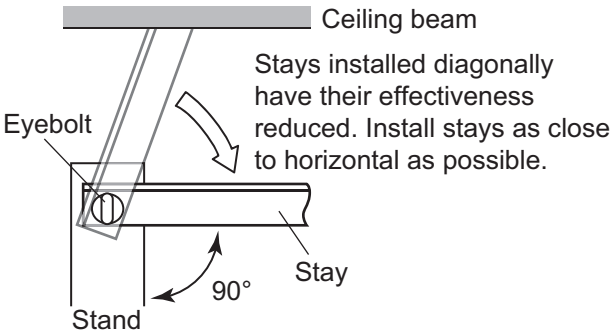

Where horizontal installation of the stays is not possible, install the stays in a diagonal manner to reduce vibration in the hull unit. Install the upper stays (attached to the top of the hull unit) in opposing directions (one facing fore, one facing aft), then attach the stays to ceiling beams. This reduces axial movement. The side stays should be installed and attached to the hull framework.

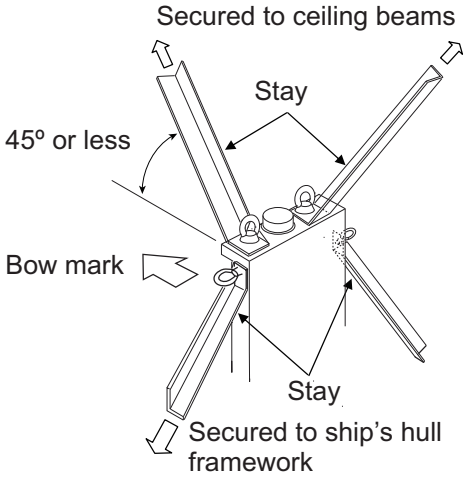

Non-horizontal stay installation

Shackle holes

When transporting the hull unit in a horizontal manner, use the shackle holes shown in the figure to the right. Attach shackles to the holes, then use block and tackle or chain, attached to the shackles, to move the hull unit.

Note: Once the hull unit is set in place, remove the shackles and ropes.

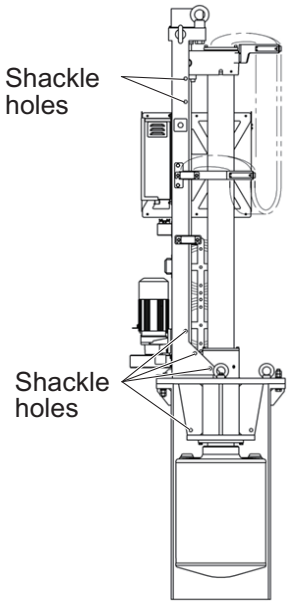

1.2 Processor Unit

The processor unit can be installed on a deck or bulkhead.

Mounting considerations

Select a mounting location, keeping in mind the following points:

- Locate the unit out of direct sunlight and away from heat sources.
- Locate the unit away from places subject to water splash and rain.
- Select a mounting location considering the length of the cables to be connected to the unit.
- Select a location where shock and vibration are minimal.
- Be sure the mounting location is strong enough to support the weight of the unit.
- Referring to the outline drawings at the back of this manual, allow sufficient space for maintenance and service.
- A magnetic compass will be affected if the unit is placed too close to the magnetic compass. Observe the compass safe distances at the front of this manual to prevent interference to a magnetic compass.
- For the bulkhead installations, secure the unit so that the cable entrance faces downward.

1.2.1 Deck mount

1. Drill four pilot holes in the mounting location for mounting screws (M6 bolts or coach screws ϕ6), referring to the outline drawing at the back of this manual.
2. Secure the unit using the four mounting screws (supplied locally).

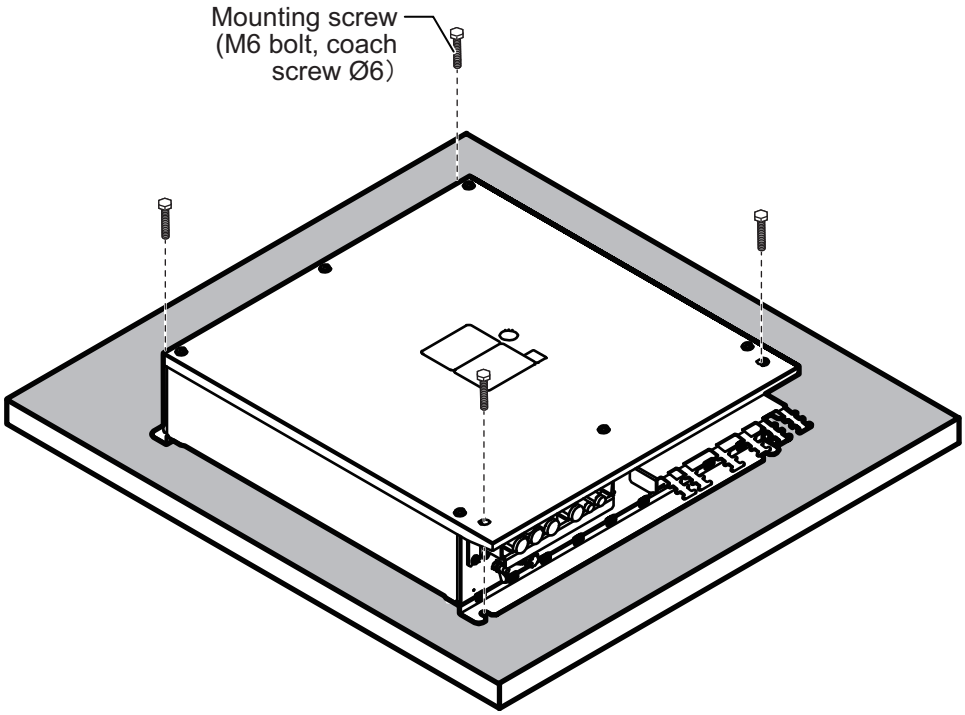

1.2.2 Bulkhead mount

1. Drill four pilot holes in the mounting location for mounting screws (M6 bolts or coach screws ϕ6), referring to the outline drawing at the back of this manual.
2. Screw two mounting screws (supplied locally) into the lower pilot holes. Leave 5 mm of thread visible.
3. Set the notches of the unit onto the screws fastened at step 2.
4. Screw two mounting screws (supplied locally) into the upper fixing holes.
5. Fasten all screws tightly to secure the unit in place.

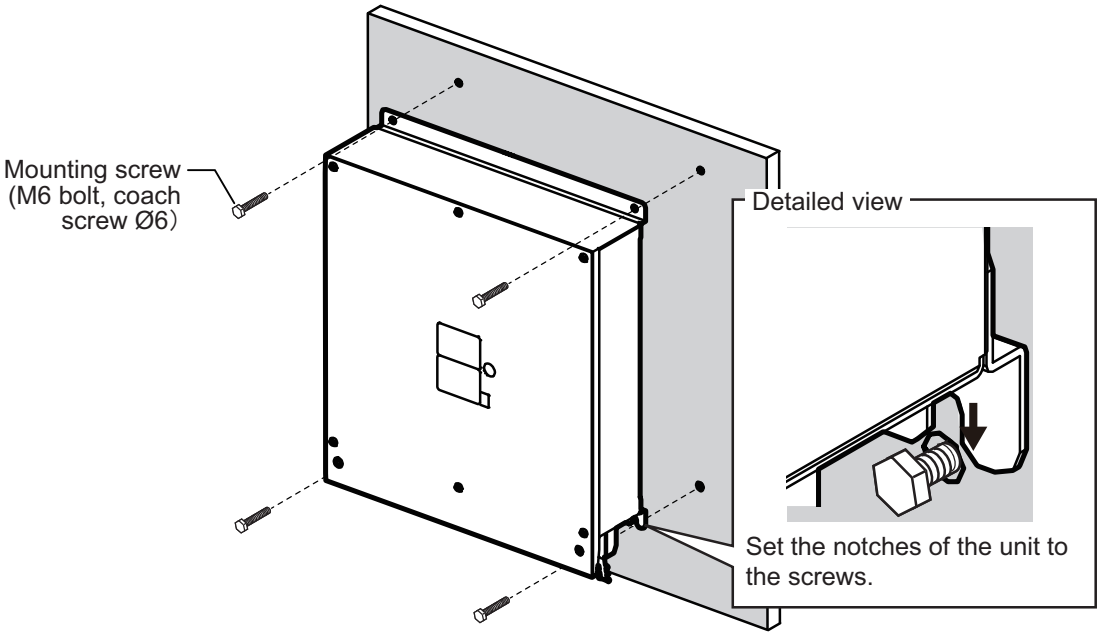

1.3 Control Unit

The control unit has following three mounting methods:

- Tabletop mounting: The unit is secured from the underside.
- Tabletop mounting with KB fixture: The unit is secured from the topside.
- Flush mounting

Mounting considerations

- Select a location where the unit can easily be operated.
- Locate the unit out of direct sunlight.
- Locate the unit away from places subject to water splash and rain.
- Select a location where shock and vibration are minimal.
- Select a mounting location considering the length of the cable.
- Referring to the outline drawings at the back of this manual, allow sufficient space for maintenance and service.
- A magnetic compass will be affected if the unit is placed too close to the magnetic compass. Observe the compass safe distances at the front of this manual to prevent interference to a magnetic compass.
- For flush installations, select a location where the surface is flat.

1.3.1 Tabletop mounting without KB fixture

1. Drill four pilot holes in the mounting location for stud bolts (M4×50), referring to the outline drawing at the back of this manual.
2. Attach a ground wire (IV-1.25sq, supplied locally) to the ground terminal at the bottom of the unit, then connect the other end of the ground wire with the ship's ground.
3. Insert four stud bolts (M4×20, supplied) to the bolt holes at the bottom of the unit.
   Note: Insert the stud bolts manually. Do not use a tool to insert the bolts - the unit may become damaged.

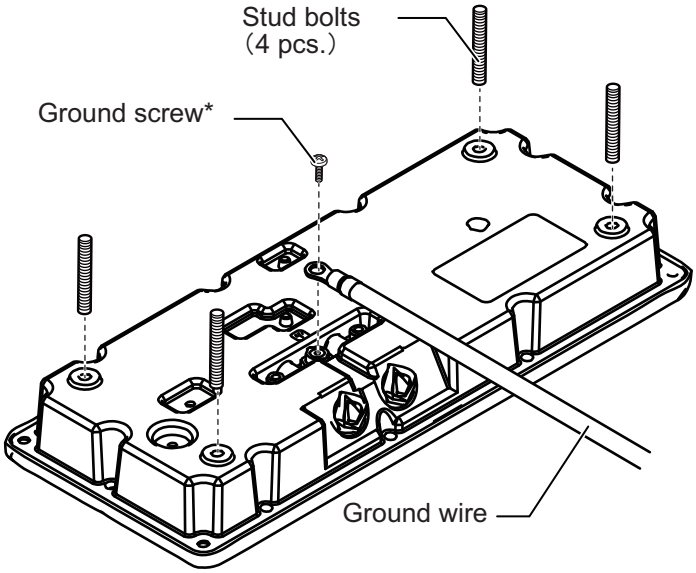

*: Use the screw that is preattached to the ground terminal.

4. Set the unit to the mounting location so that the stud bolts on the bottom of the unit are inserted to the pilot holes.
   Note: Be careful to prevent the ground wire from being caught between the unit chassis and mounting surface.

5. Fasten the four wing nuts (supplied) to the stud bolts from the rear side of the mounting surface.

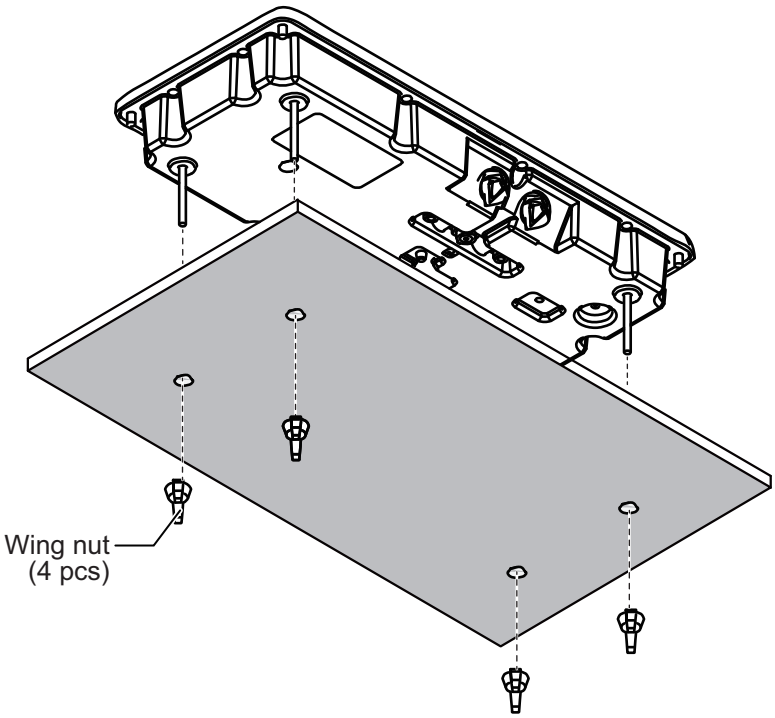

1.3.2 Tabletop mounting with KB fixture

The control unit can be mounted with the KB fixture, which mounts the unit at an angle.

1. Drill four pilot holes in the mounting location for mounting screws, referring to the outline drawing at the back of this manual.
2. Secure the KB fixture (supplied) to the mounting location, using four self-tapping screws (ϕ5×20, supplied).
   Note: Secure the KB fixture so that the cutout is located on the side farthest from the operator.

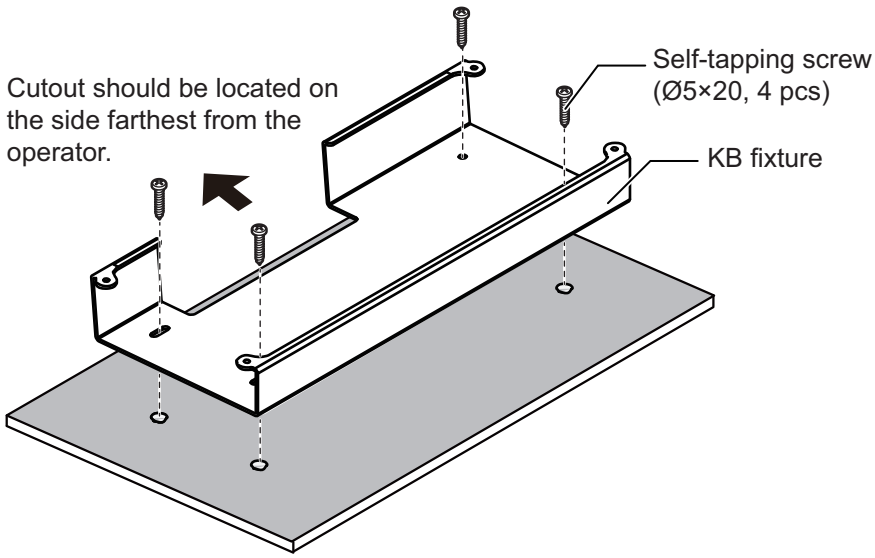

3. Attach a ground wire (IV-1.25sq, supplied locally) to the ground terminal at the bottom of the unit, then connect the other end of the ground wire with the ship's ground.

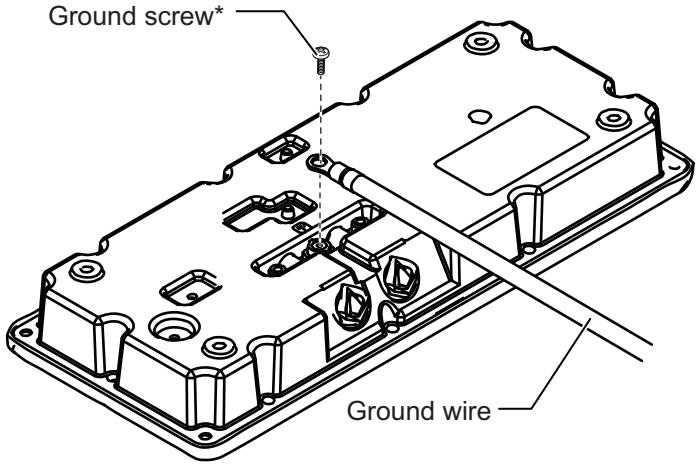

*: Use the screw that is preattached to the ground terminal.

4. Secure the control unit the KB fixture, using four binding screws (M5×20, supplied).
5. Attach four bolt hole caps (supplied).

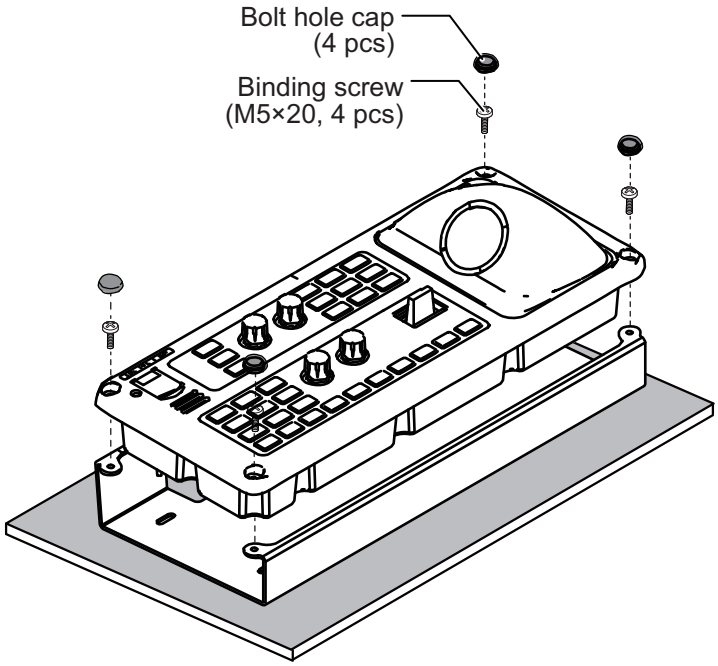

1.3.3 Flush mounting

Note: Be sure the mounting surface is flat.

1. Referring to the outline drawing at the back of this manual, prepare a cutout, then drill four pilot holes in the mounting location.
2. Attach a ground wire (IV-1.25sq, supplied locally) to the ground terminal at the bottom of the unit, then connect the other end of the ground wire with the ship's ground.

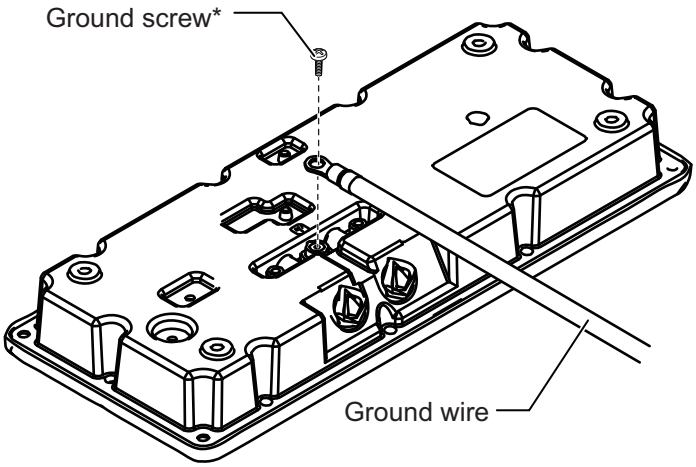

*: Use the screw that is preattached to the ground terminal.

3. Set the unit to the cutout, then secure the unit with four self-tapping screws (ϕ5×20, supplied).
4. Attach four bolt hole caps (supplied).

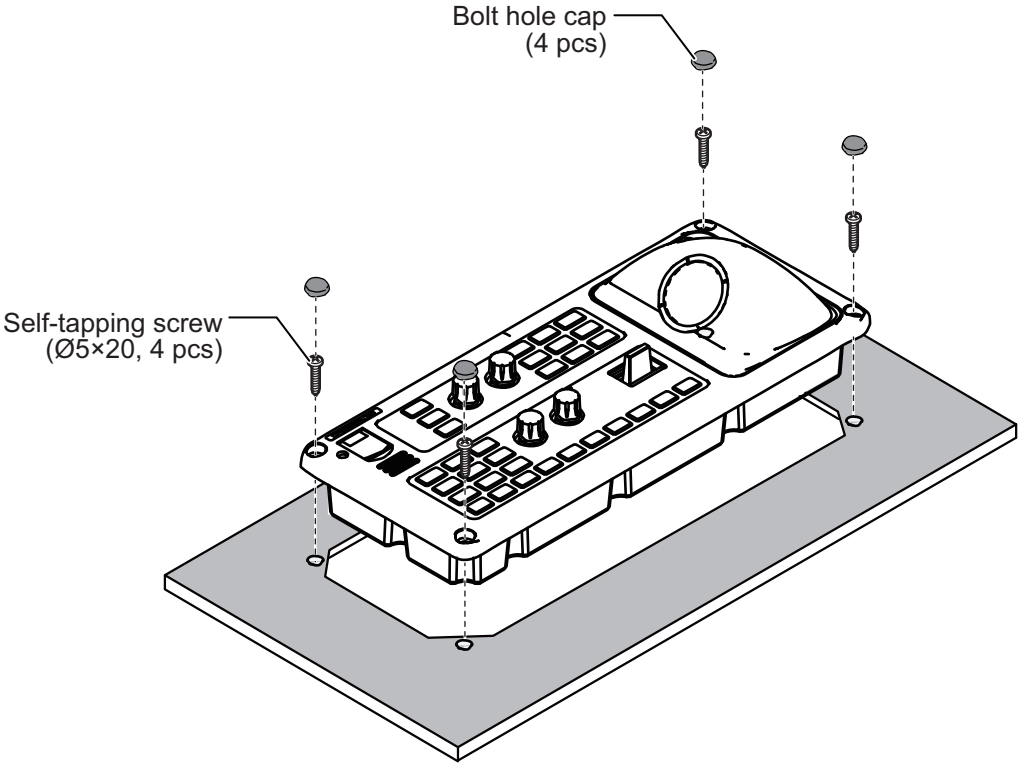

1.4 Transceiver Unit

Select a mounting location considering that the effective length of the cable between the transceiver unit and the hull unit is 5 m, 10 m or 20m.

The transceiver unit should be fixed to a mounting base (shipyard supply) whose dimensions are as shown in the outline drawing at the back of this manual. Reinforce the transceiver unit against vibration by following the procedure below.

Note: The transceiver sways with the ship's roll or pitch. Therefore, ensure safety clearance around the unit and do not place any objects within the safety clearance.

1. Attach the anti-vibration device (2 pcs.) to the mounting base using M12 bolts and nuts (4 pcs, local supply). Insert the bolts from the top of the fixing plate.

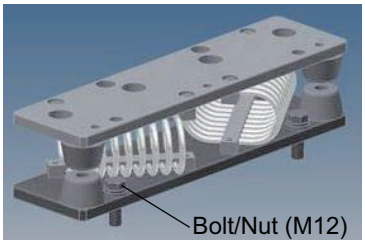

2. Place the transceiver feet on the anti-vibration devices.
   Note: Keep the transceiver unit level with horizontal line when the feet are placed on the anti-vibration devices. If the unit is placed on the anti-vibration device correctly, the stoppers (4 locations) should be separated by a gap of approx. 10 mm.

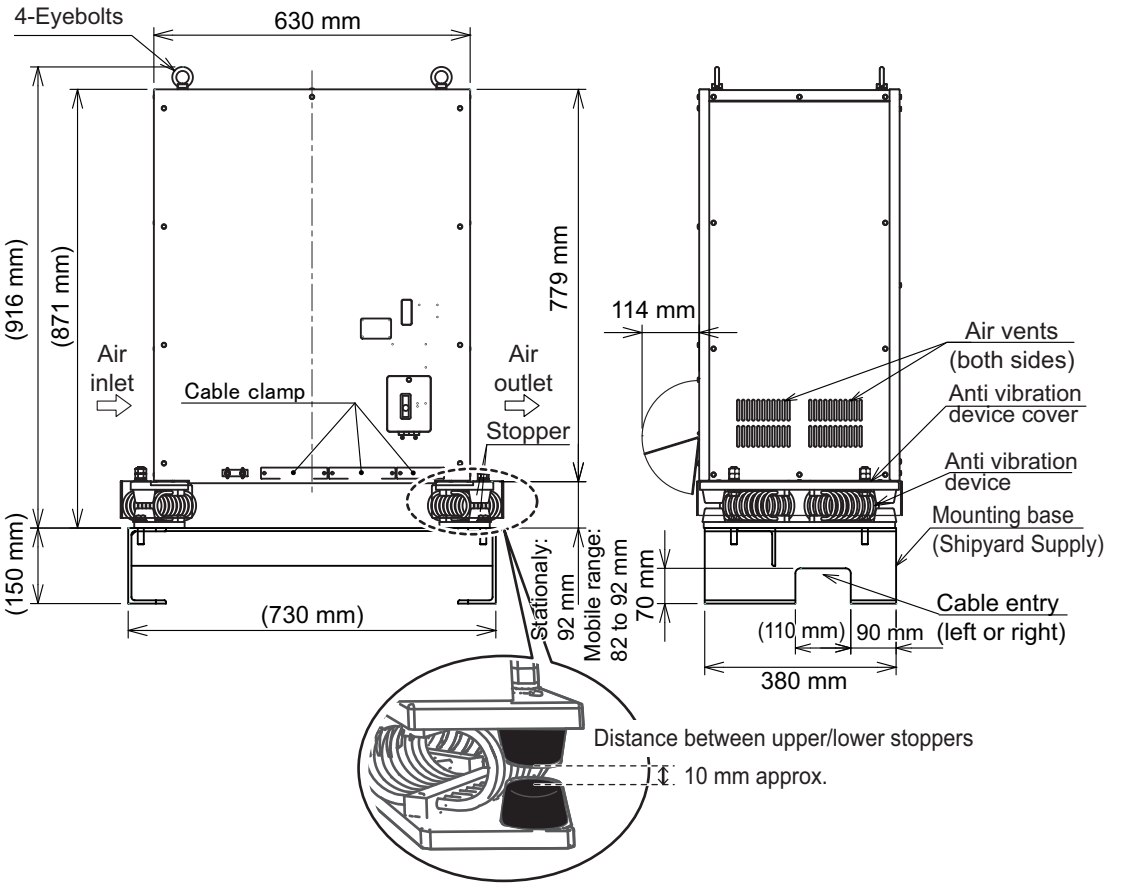

3. Fix the transceiver unit to the anti-vibration devices with M12×50 hex bolts, spring washers, plain washers and 2 × nuts (supplied). Insert the bolts from the bottom of the fixing plate.

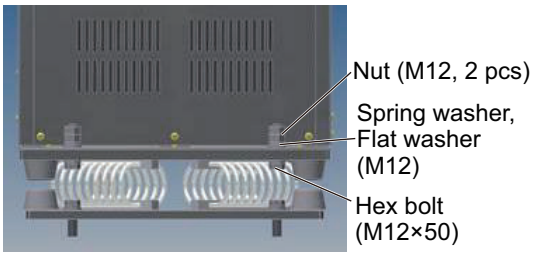

4. Using ropes (local supply), connect the eye-bolts to the ceiling or bulkhead.

   Note: The transceiver sways with the ship's roll or pitch. When the ship moves suddenly from wave impact or other causes, the transceiver unit may sway farther than the stoppers. This can cause damage to the anti-vibration device.
   To prevent damage to the anti-vibration device and the transceiver unit, secure the transceiver unit with ropes in the manner shown below.

   1) When a ceiling is available above the transceiver unit, prepare four anchor points (use locally supplied fixtures) for the ropes. When a ceiling is not available above the transceiver unit, prepare a frame (use locally supplied materials) which can be mounted to the bulkhead above the transceiver unit. The frame should have four anchor points for the ropes.

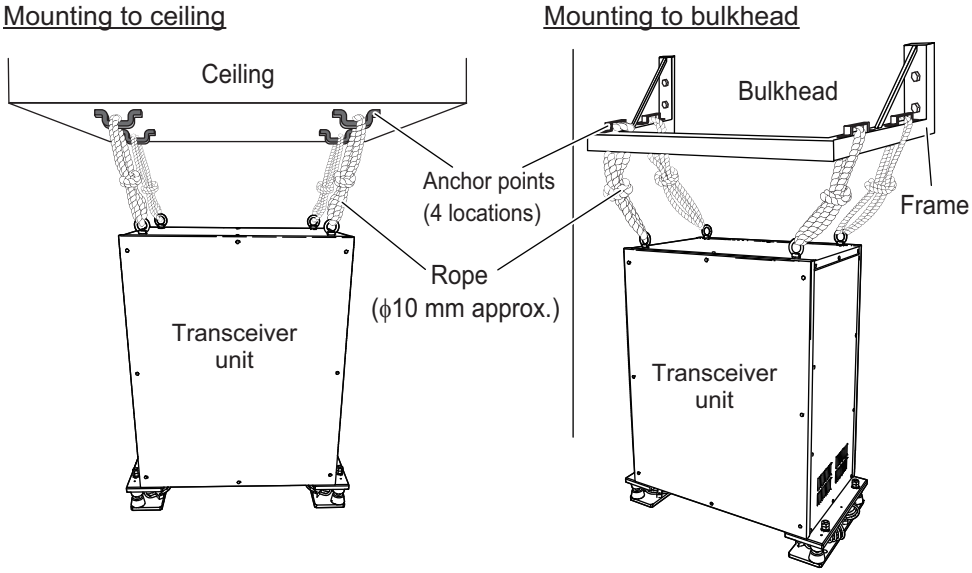

   2) Connect the eye-bolts at the top of the transducer unit to the anchor points with rope.

3) Adjust the rope length to allow the transducer unit to sway forward and backward. Push, or pull, the transceiver unit so that the stoppers on the anti-vibration device meet, then tighten the rope.

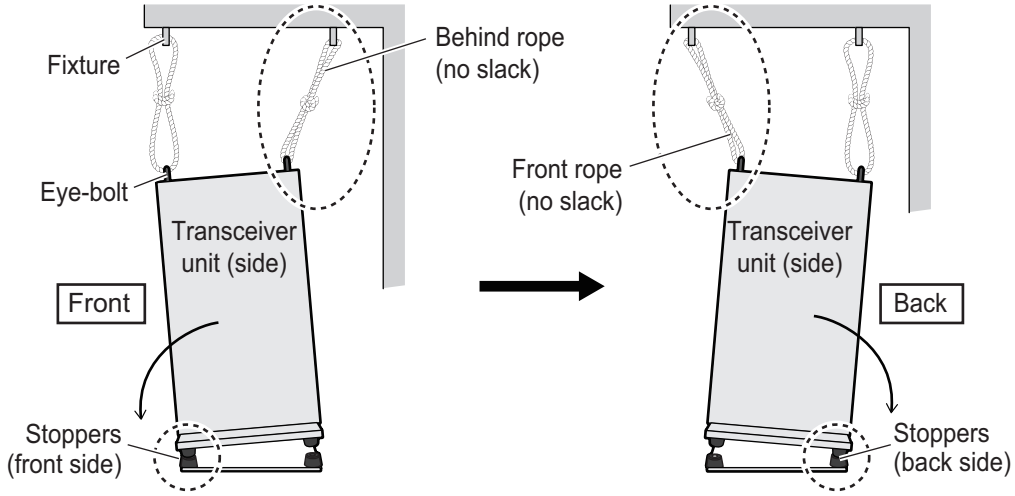

1. Pull the transceiver unit toward front, then adjust the behind rope length so that the front side stoppers are touched.

2. Push the transceiver unit toward back, then adjust the front rope length so that the back side stoppers are touched.

5. Place the anti-vibration device covers over the transceiver base, then secure the covers to the anti-vibration devices using the M4×8 bolts (supplied).

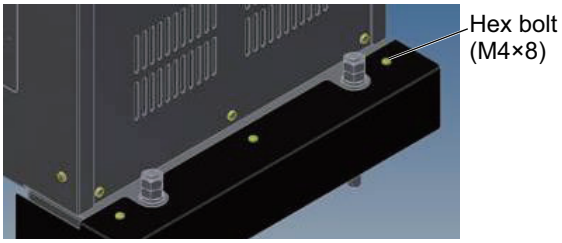

1.5 Power Supply Unit

1.5.1 FSV-252

The FSV-252 can be installed on a deck/desktop or bulkhead. Fasten the unit to the mounting location using four M10 bolts (local supply). For the bulkhead mount, make sure the unit is mounted with the cable entry facing downward. Be sure the mounting location is strong enough to support the weight of the unit under the continued vibration which is normally experienced on the ship. If necessary reinforce the mounting location. If necessary, change the orientation of the air vents on the sides of the unit so the vent openings are facing downwards.

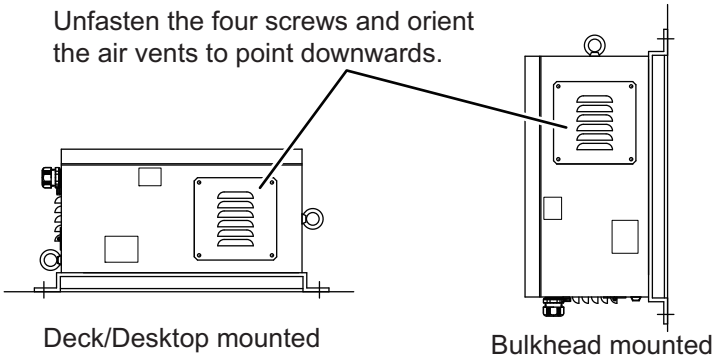

Suspending the FSV-252 (when using a crane, etc.)

The FSV-252 weighs approximately 37.5 kg. The attached eye-bolts are used for hoisting the FSV-252. Only suspend the FSV-252 upside down when moving it, do not install the FSV-252 upside down. Use the figure below for reference.

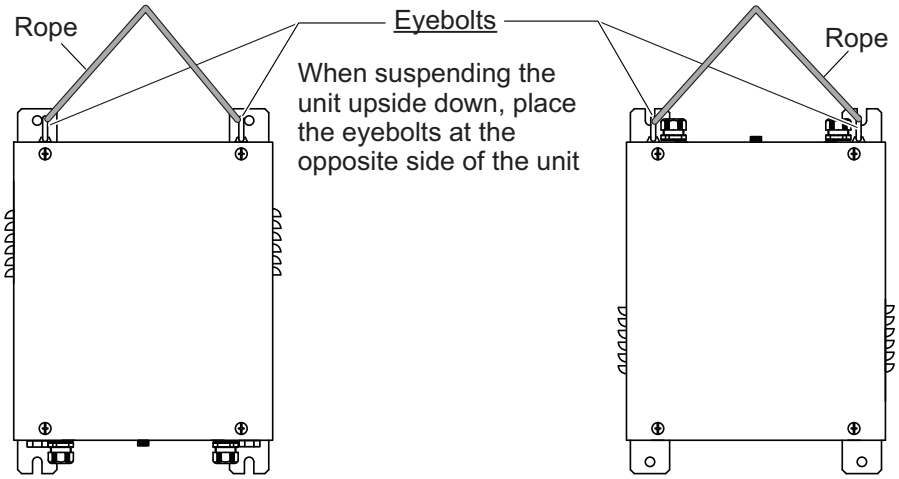

Default placement of eyebolts

Suspended upside down

1.5.2 FSV-252A

The FSV-252A can be installed on a deck/desktop or bulkhead. Fasten the unit to the mounting location, using four M10 bolts and flat washers (supplied locally). For the bulkhead installation, secure the unit so that the cable entrance faces downward. Be sure the mounting location is strong enough to support the weight of the unit under the continued vibration which is normally experienced on the ship. If necessary reinforce the mounting location.

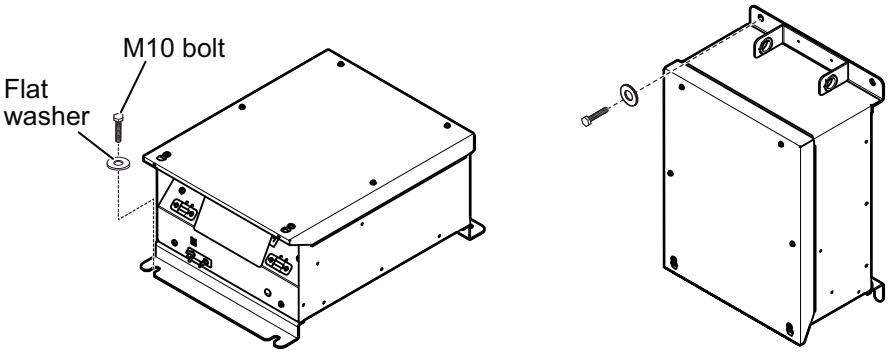

Deck/Desktop mounted

Bulkhead mounted

Hoisting the FSV-252A

The FSV-252 weighs approximately 27 kg. To hoist the unit, attach the shackle to the holes (ϕ20) on the top of the unit.

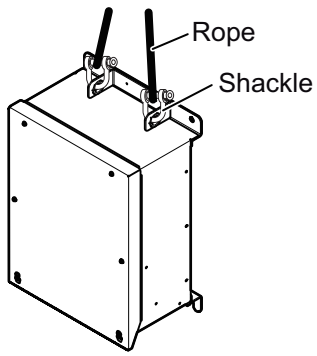

1.6 Junction Box

A junction box must be installed between the transceiver and the hull unit. Referring to the outline drawings at the back of this manual for dimensions, install the junction box on a wall or bulkhead where possible. Where installation on a wall or bulkhead is not possible, install the junction box securely on the hull unit stand. When installing the junction box to the hull unit, secure the supplied fixing plate to the hull unit, using hex. washer head bolts (M12×35, 6 pcs., supplied). Secondary secure the junction box to the fixing plate, using hex. washer head bolts (M10×25, 6 pcs., supplied).

Note: The fixing plate must be oriented in the direction as shown in the following figure.

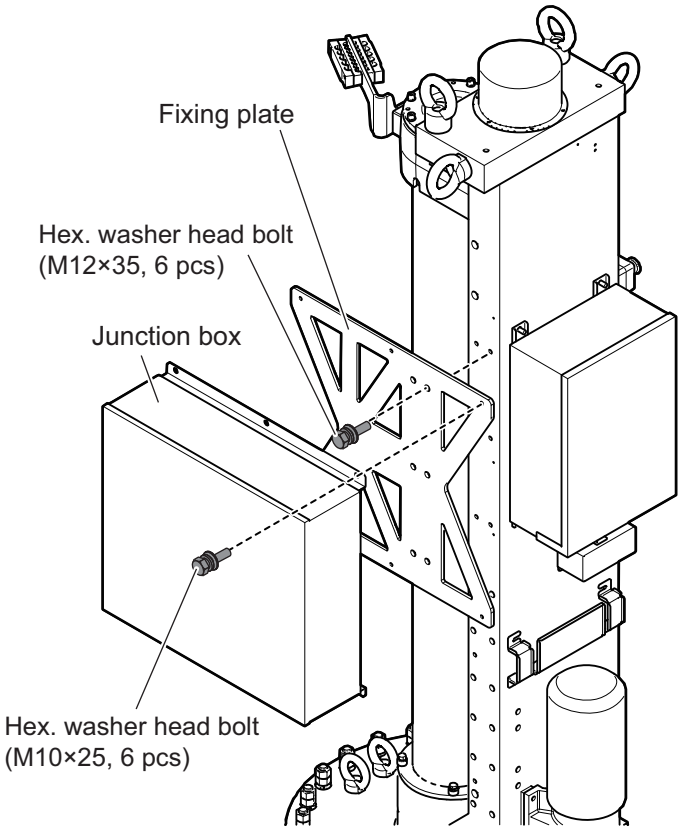

1.7 Raise/Lower Control Box

The inertial measurement unit is installed in the raise/lower control box. When using the control box extension box (FSV-2560), remove the inertial measurement unit and two fans from the raise/lower control box and install them in the control box extension box, then secure the control box extension box to the hull unit.

How to attach the raise/lower control box to a bulkhead

When using the control box extension box, the raise/lower control box can only be installed on a bulkhead. Use four M10 bolts to fasten the raise/lower control box in position.

The internal electromagnetic switches only function correctly if the raise/lower control box is installed in the correct orientation, as shown in the figure to the right.

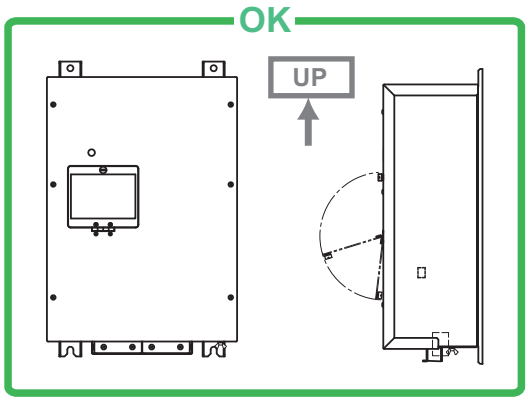

Note 1: When installing the inertial measurement unit inside the raise/lower control box, you must enter the location and angle of the raise/lower control box for heading correction. (See section 3.5 for how to adjust the heading.)

Note 2: When the raise/lower control box is mounted separately from the hull unit, remove the inertial measurement unit and two fans from the raise/lower control box and install them in the control box extension box, then secure the control box extension box to the hull unit. The reference position for the inertial measurement unit is based on the state where it is attached to the hull unit. Therefore, if the inertial measurement unit is separated from the hull unit, stabilizer function does not work properly.

1.8 Control Box Extension Box

To install the optional control box extension box, do the following.

1. Unfasten the M10 bolts (4 pcs.) connecting the raise/lower control box to the hull unit.
2. Disconnect the raise/lower control box cabling, then connect the cables to the control box extension box.
3. Install the extension box in the location the raise/lower control box originally was installed, using the M10 bolts (4 pcs.) unfastened in step 1.

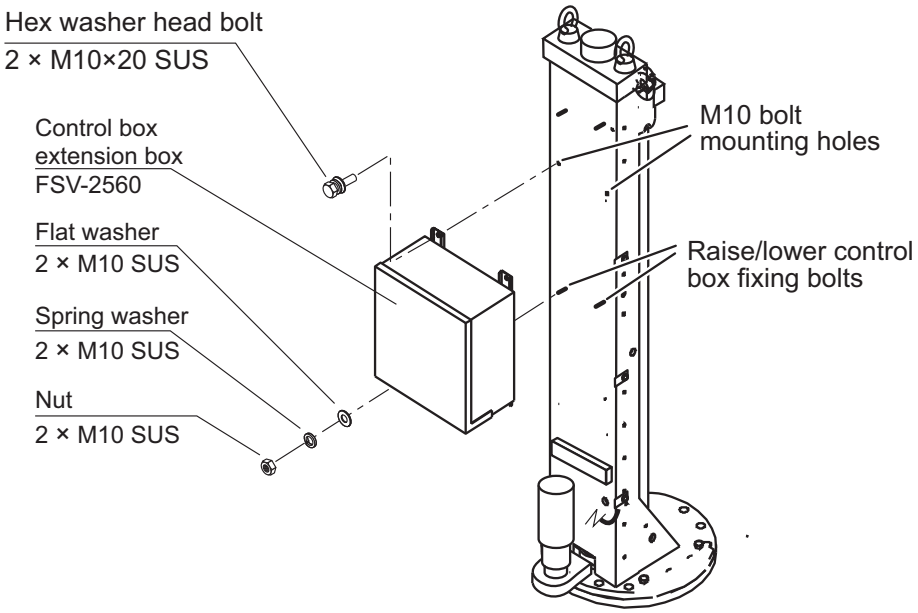

1.9 Installing to an Existing Retraction Tank

To install the hull unit to the existing retraction tank for the CSH-20 or FSV-24/30/35 hull unit on a steel hull, use the following optional kit.

- When tank length does not need to be extended, use the attachment kit.
- When tank length needs to be extended, use the attachment kit and attachment flange.

1.9.1 When tank extension is not required

When the tank length does not need to be extended for installation to the existing retraction tank, use the optional attachment kit (type: OP10-24).

The items supplied with the attachment kit are listed in the following table.

Name	Type	Code No.	Qty	Remarks
Insulated gaskets (1)	MS-1000-67-1	100-347-601-10	24	
Insulated gaskets (2)	MS-1000-68-1	100-347-611-10	24	

Note: Remove marine life (barnacles, etc.) from the existing retraction tank before installing the hull unit.

1. Clean the flange and O-ring groove of the retraction tank (welded to hull) with ethyl alcohol moistened waste cloths.
2. Apply lithium grease to the O-ring and O-ring groove. Place the O-ring in its groove on the tank flange.
3. Confirm the following points as below and place the hull unit on the retraction tank.
   - Clean the flange platform.
   - Wipe the undersurface of the attachment flange with clean waste cloths.
   - Keep O-ring in its position.

4. Coat threads of the bolts with a slight amount of lithium grease to prevent scorching, then secure the and hull unit, referring to the following figure.

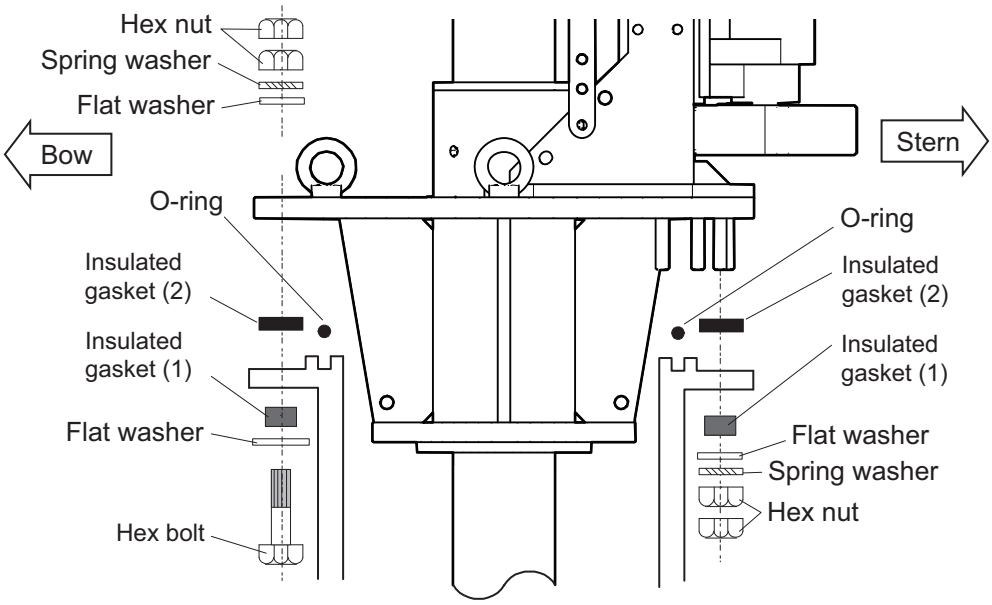

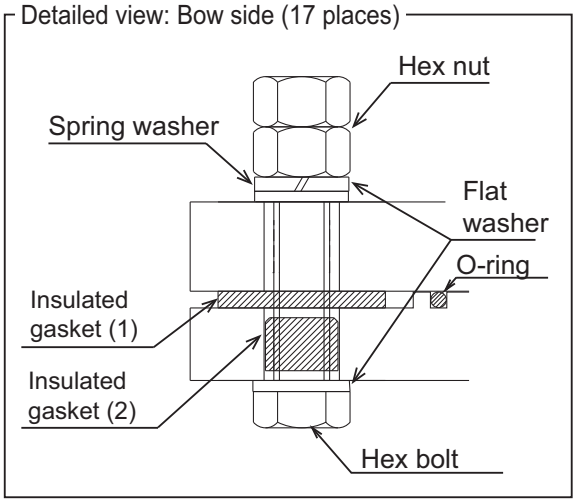

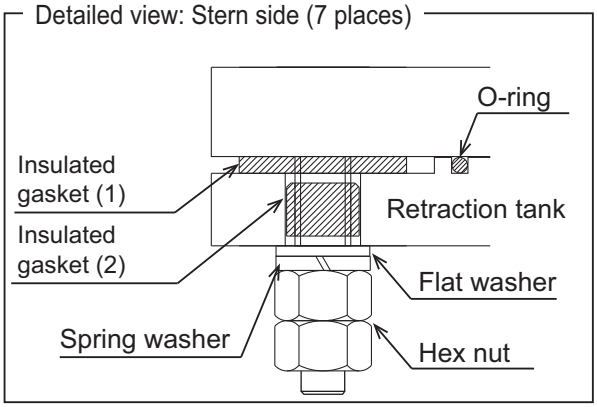

1.9.2 When tank extension is required

If you need to extend to the tank length when installing to an existing retraction tank, use the optional attachment kit and attachment flange.

Select the correct attachment flange from the following table, using the length of the pre-installed tank to determine the raising height.

Name	Flange type	Raising height
Attachment flange	OP10-42	150 mm
	OP10-38	200 mm
	OP10-39	250 mm
	OP10-43	280 mm
	OP10-44	315 mm

Note: Do not use multiple attachment flanges to a retraction tank.

The Items supplied with the attachment kit and attachment flange are listed in the following table.

Name	Type	Code No.	Qty	Remarks
Attachment kit				
Insulated gaskets (1)	MS-1000-67-1	100-347-601-10	24	
Insulated gaskets (2)	MS-1000-68-1	100-347-611-10	24	
Attachment flange				
Attachment Flange	10-089-5701-2	100-387-342-10	1	For OP10-42
	10-089-5702-2	100-387-352-10		For OP10-38
	10-089-5703-2	100-387-362-10		For OP10-39
	10-089-5704-2	100-387-372-10		For OP10-43
	10-089-5705-2	100-387-382-10		For OP10-44
O-Ring	C0 0318A (V585)	000-166-370-10	1	
Spring Washer	M20 SUS304	000-167-401-10	24	
Flat Washer	M20 SUS304	000-167-452-10	48*	
Hex. Nut	M20 SUS304	000-167-476-10	48	
Hex. Head Screw	M20X120 SUS304	000-162-476-10	48	Not included for OP10-42.

*: 24 flat washers are included with OP10-42.

Note: Remove marine life (barnacles, etc.) from the existing retraction tank before installing the hull unit.

1. Clean the flange and O-ring groove of the retraction tank (welded to hull) with ethyl alcohol moistened waste cloths.
2. Apply lithium grease to the O-ring and O-ring groove. Place the O-ring in its groove on the tank flange.
3. Confirm the following points as below and place the attachment flange on the retraction tank.
   - Clean the flange platform.
   - Wipe the undersurface of the attachment flange with clean waste cloths.
   - Keep O-ring in its position.

4. Coat threads of the bolts with a slight amount of lithium grease to prevent scorching, then secure the attachment flange and hull unit, referring to the following figure.

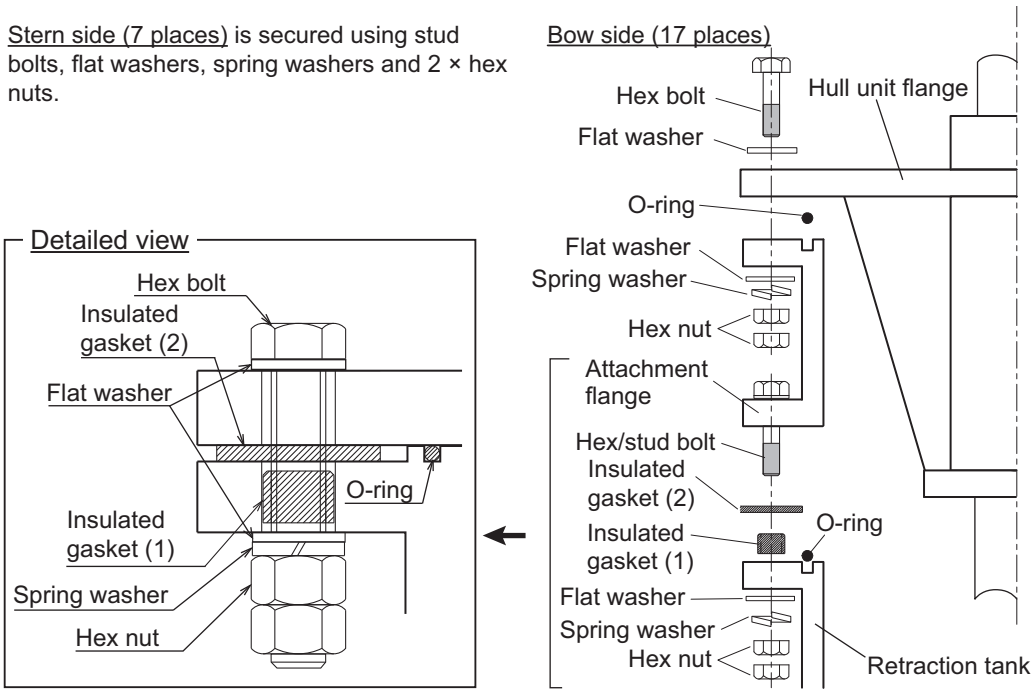

5. Reinforce the attachment flange using reinforcement ribs.

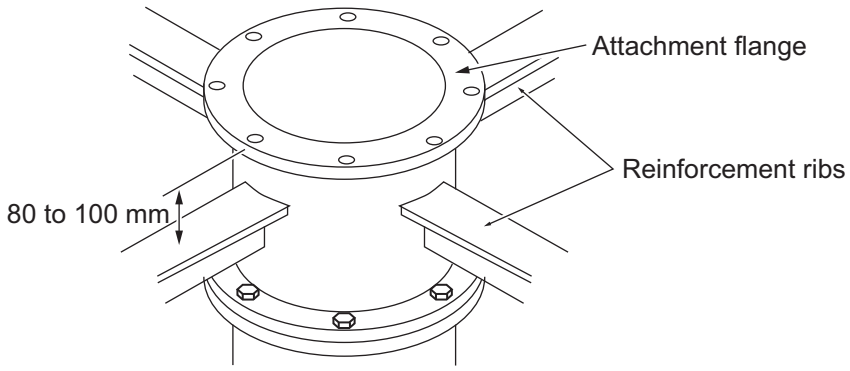

Note: For installations requiring welding of the reinforcement ribs:

1) Temporarily remove the insulated gasket (1), insulated gasket (2) and O-ring.
2) Temporarily install the attachment flange, then install and weld the reinforcement ribs.
3) Remove the attachment flange, then replace the insulated gasket (1), insulated gasket (2) and O-ring.
4) Follow step 4 above.

1.10 Sub Control Unit (Option)

The control unit has following three mounting methods:

- Tabletop mounting: The unit is secured from the underside.
- Tabletop mounting with KB fixture: The unit is secured from the topside.
- Flush mounting

Mounting considerations

- Select a location where the unit can easily be operated.
- Locate the unit out of direct sunlight.
- Locate the unit away from places subject to water splash and rain.
- Select a location where shock and vibration are minimal.
- Select a mounting location considering the length of the cable.
- Referring to the outline drawings at the back of this manual, allow sufficient space for maintenance and service.
- A magnetic compass will be affected if the unit is placed too close to the magnetic compass. Observe the compass safe distances at the front of this manual to prevent interference to a magnetic compass.
- For flush installations, select a location where the surface is flat.

1.10.1 Desktop installation, with keyboard fixture

1. Fix the keyboard fixture to the bottom of the unit with the pan head screws (M4×12, supplied).
2. Attach rubber feet (2 pcs., supplied) to the bottom of the unit.
3. Fix the unit to the mounting location with self-tapping screws (local supply).

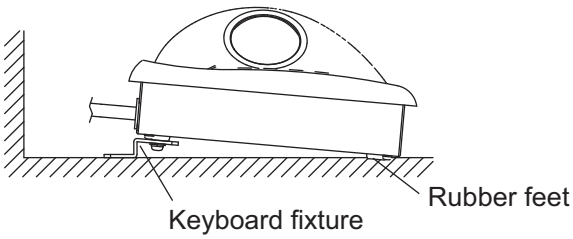

1.10.2 Desktop installation, no keyboard fixture

1. Drill four mounting holes of 5 mm diameter, referring to the outline drawing at the back of this manual.
2. Fix the unit with four screws (M4, supplied locally) from under side of the desktop. Supply the screws locally. Be sure the screws are of a sufficient length for the thickness of the desktop.

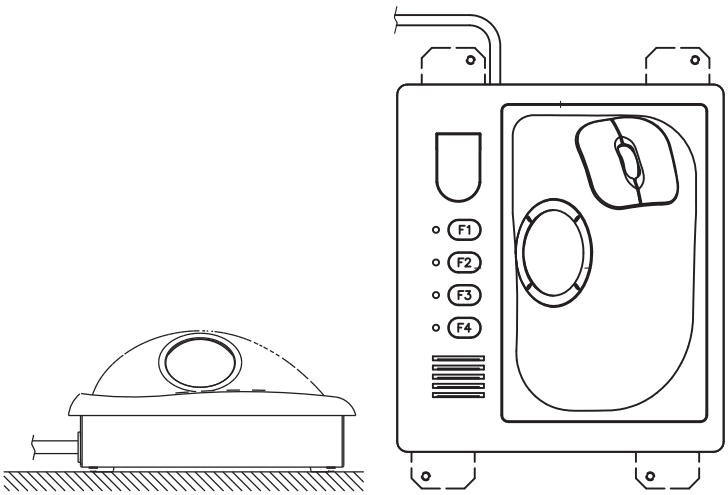

1.10.3 Flush mount (option)

Use the optional flush mount kit (Type: FP03-09870, Code No.: 008-535-630) to mount the sub control unit.

Name	Type	Code No.	Qty
Mounting plate	03-163-7531	100-306-261	4
Hex nut	M5	000-863-108	4
Wing screw	M5x40	000-162-682-10	4
Pan head screw	M4x12	000-163-192-10	4

1. Prepare a cutout in the mounting location referring to the outline drawing at the back of this manual.
2. Set the unit to the cutout.
3. Attach the mounting plate to the unit with four pan head screws from the rear side.
4. Screw the wing screw to each mounting plate and then insert hex bolt to each wing screw.
5. Fasten each wing screw and then fasten the hex nuts.

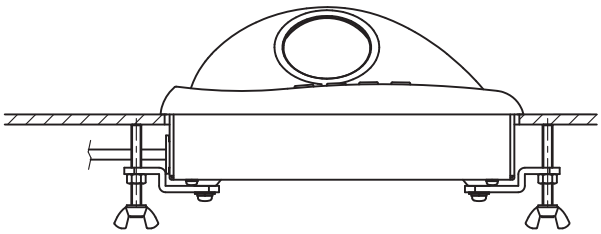

2. WIRING

2.1 How to Connect the Units

The illustration on this page shows the general connection of the FSV-25/25S MARK-2. For detailed information, see the interconnection diagram. Many or the cables mentioned are JIS (Japanese Industrial Standards) cables. If not available locally, use the equivalent. See the cable guide in the Appendix for how to select equivalent cables.

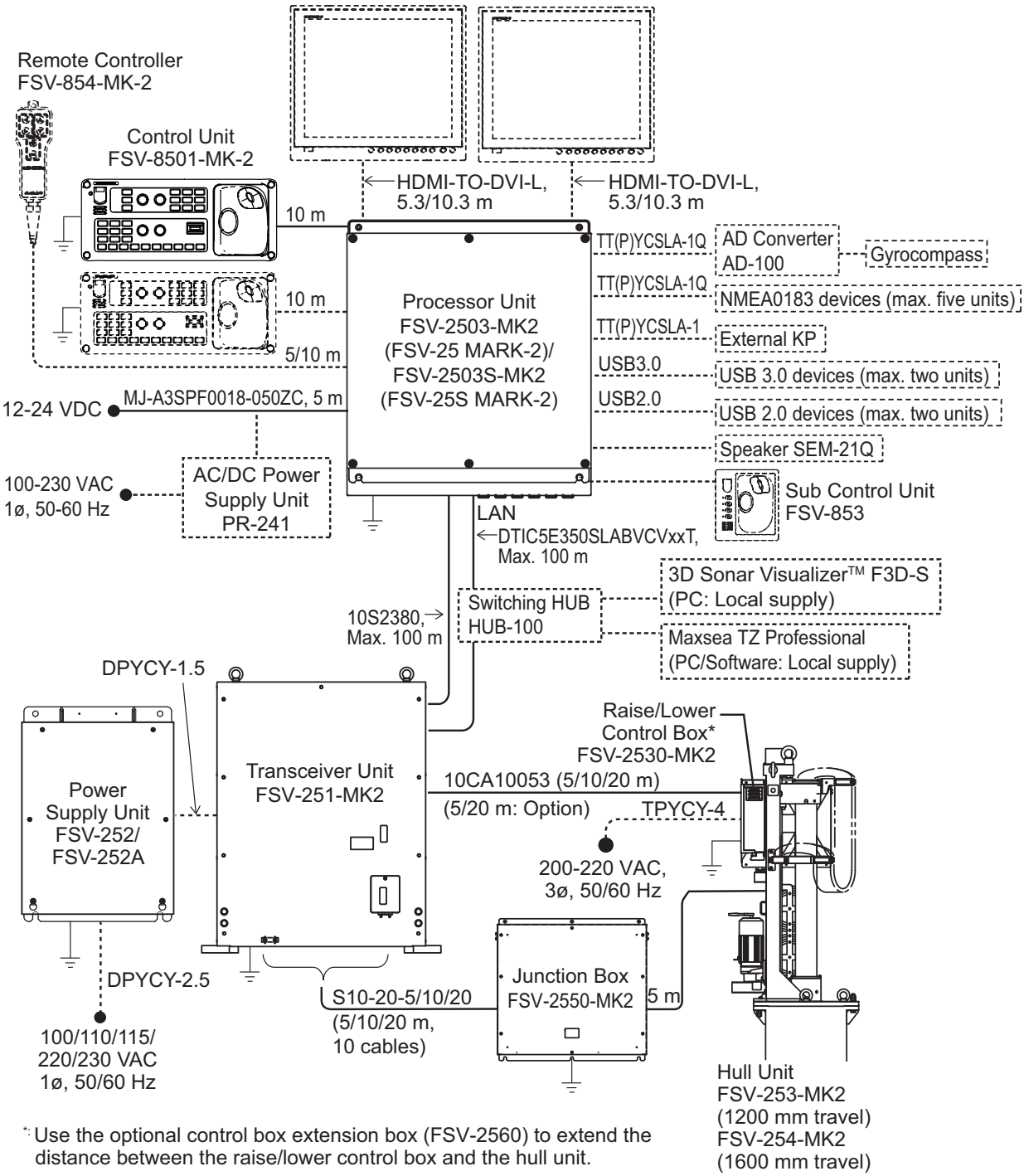

*: Use the optional control box extension box (FSV-2560) to extend the distance between the raise/lower control box and the hull unit.

Grounding

The processor unit, transceiver unit, power supply unit and hull unit must have a protective earth. Use a ground wire (IV-8sq., local supply) or a ground plate. A copper strap is supplied with the transceiver unit, power supply unit and raise/lower control box.

Transducer cable

NOTICE

Route the cables so their lengths are as indicated in the figure on the next page.

Failure to observe the lengths may damage or sever cables.

- The transducer cables (10S101670, 10 cables) are secured on the cable securing plate. After installation of the hull unit, release the transducer cables from the cable securing plate for wiring.

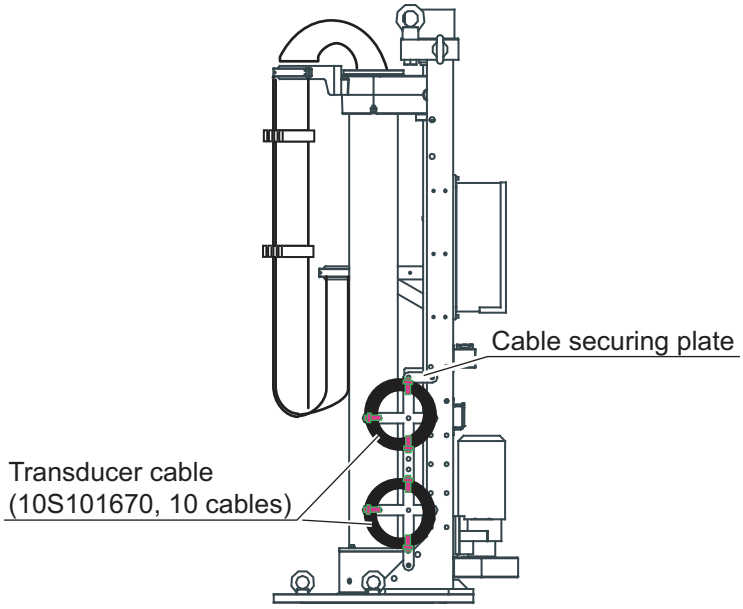

- When the transducer is removed from the hull unit while installing the hull unit, re-attach the transducer and route the transducer cables as shown in the following figure.

Transducer cable routing layout

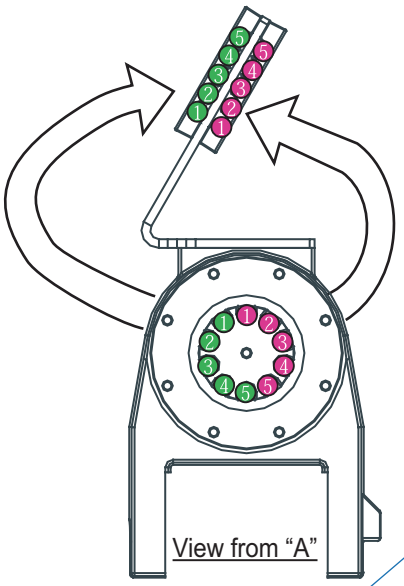

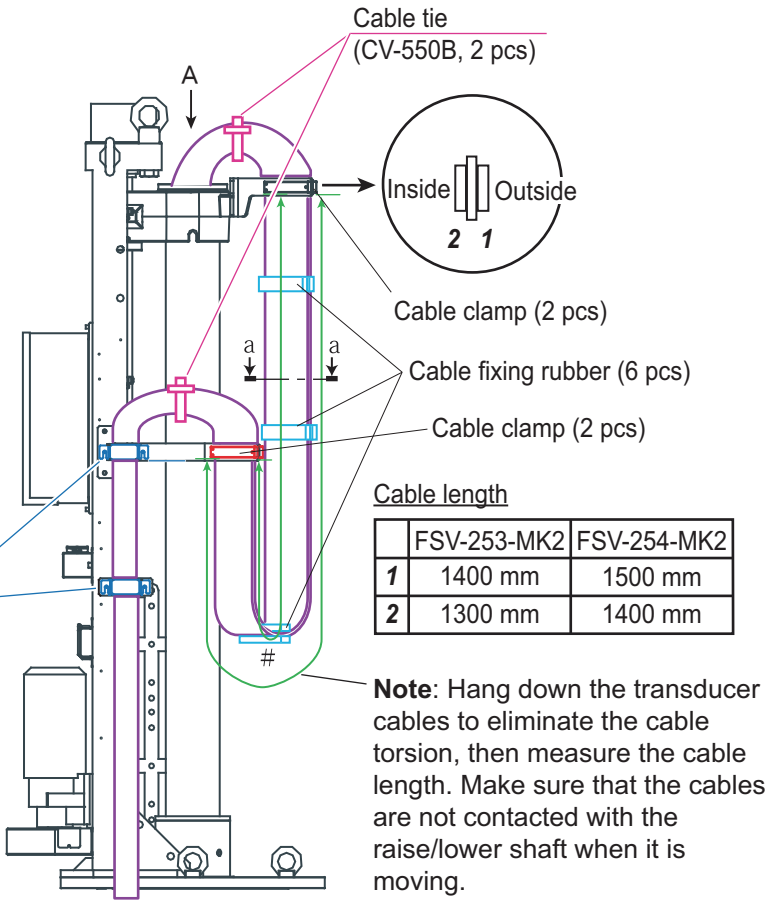

Cable length

	FSV-253-MK2	FSV-254-MK2
1	1400 mm	1500 mm
2	1300 mm	1400 mm

Note: Hang down the transducer cables to eliminate the cable torsion, then measure the cable length. Make sure that the cables are not contacted with the raise/lower shaft when it is moving.

How to attach the cable clamp

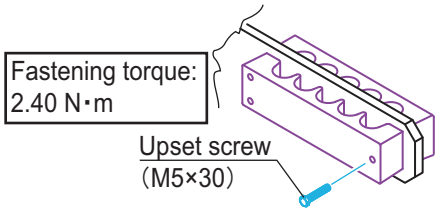

Use three screws to secure one cable clamp.

How to attach the cable fixing plate

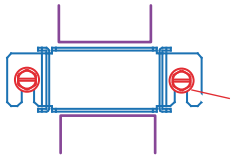

Fastening torque:
18.4 N･m

Use the hex bolt (M8×16), spring washer (M8), flat washer (M8).

How to attach the cable fixing rubber

Cross-section view: a-a

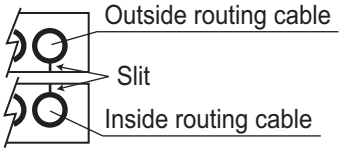

Attach two cable routing rubber at the regular intervals between the cable clamps.

Note: The distance between inside and outside routing cable must be 30 to 40 mm, at the location "# (indicated in the figure above)".

2.2 Processor Unit

2.2.1 Connectors

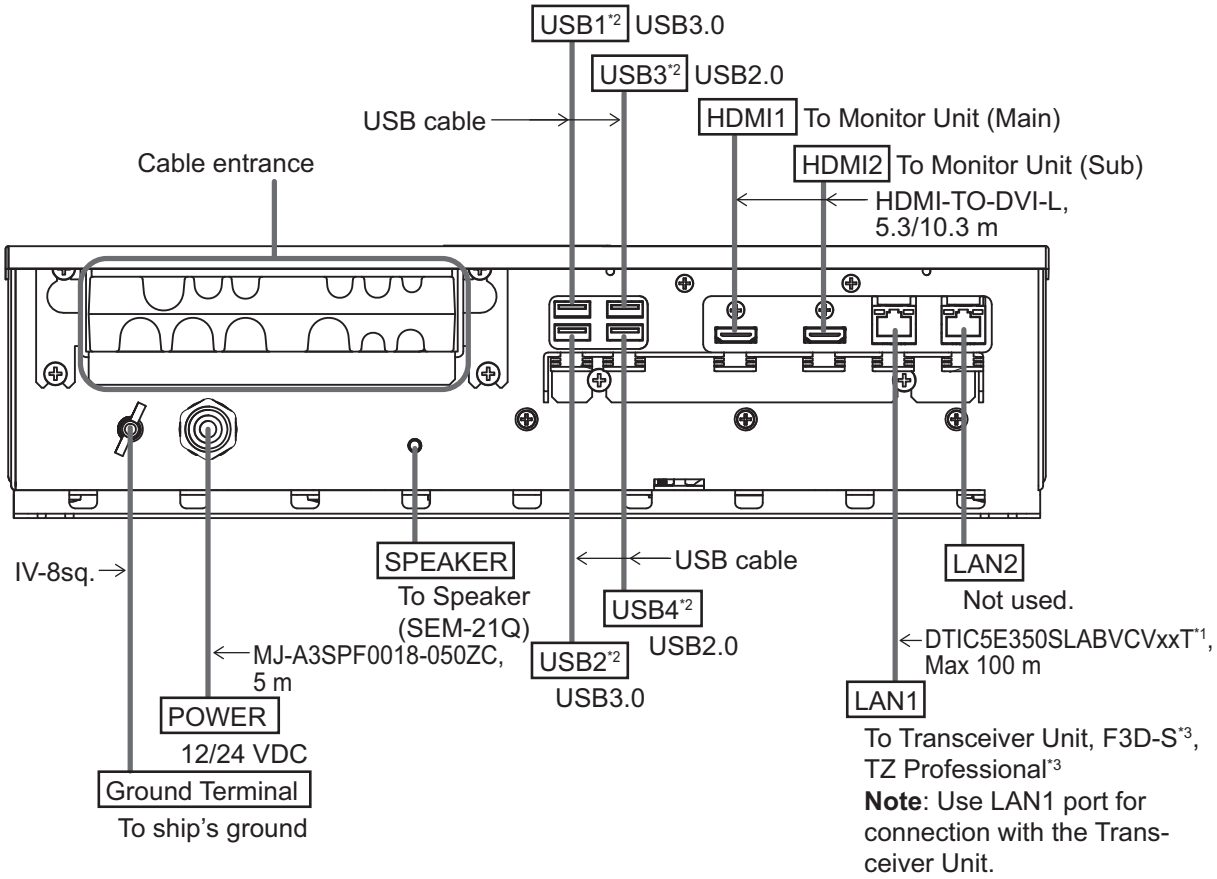

*1: Fabricate the cable referring to section 2.2.3.

*2: To connect a USB device, use the lower USB port first.

*3: Requires HUB-100.

Secure the USB, HDMI and LAN cables to the cable clamp with a cable tie (supplied locally). For the USB cables, use two cable ties to secure the cable.

Note: The cable clamp can be adjusted to allow larger connectors, such as USB or HDMI, to be connected.

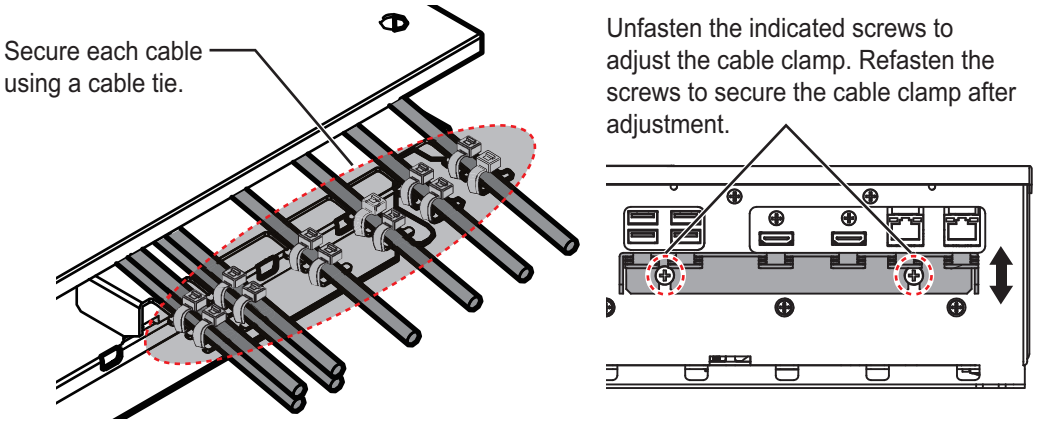

2.2.2 Internal wiring and cable clamp position

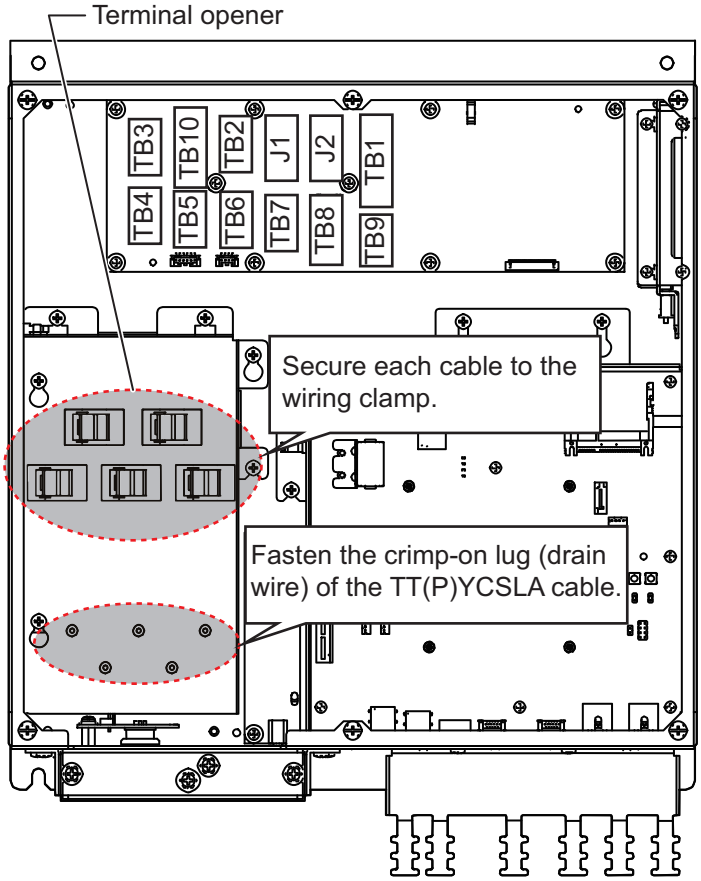

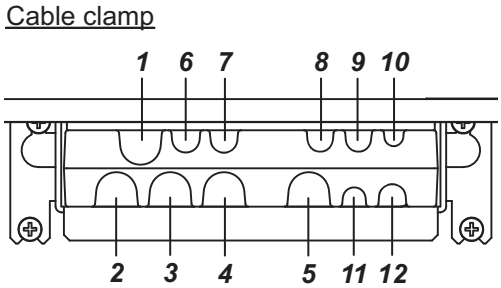

Clamp position	Connect to	Cable from	Cable
1	TB3	NMEA0183 equipment	TT(P)YCSLA--1Q*[1]
2	TB4		
3	TB5		
4	TB6		
5	TB7		
6	TB10	Transceiver unit	10S2380*[1]
7	TB2	AD converter (AD-100)	TT(P)YCSLA-1Q*[1]
8	J1	Control unit	-
9	J2	Control unit	-
10	TB1	Remote controller, external switch*[2]	-
11	TB8	External KP*[3]	TT(P)YCSLA-1*[1]
12	TB9	Not used	-

*[1]: Fabricate the cables referring to section 2.2.3.

*[2]: To connect an external switch, see section 2.2.5.

*[3]: To connect an external KP, see section 2.2.6.

2.2.3 Cable fabrication

10S2380 cable

Note: For how to fabricate the cable end at the transceiver unit side, see section 2.4.1.

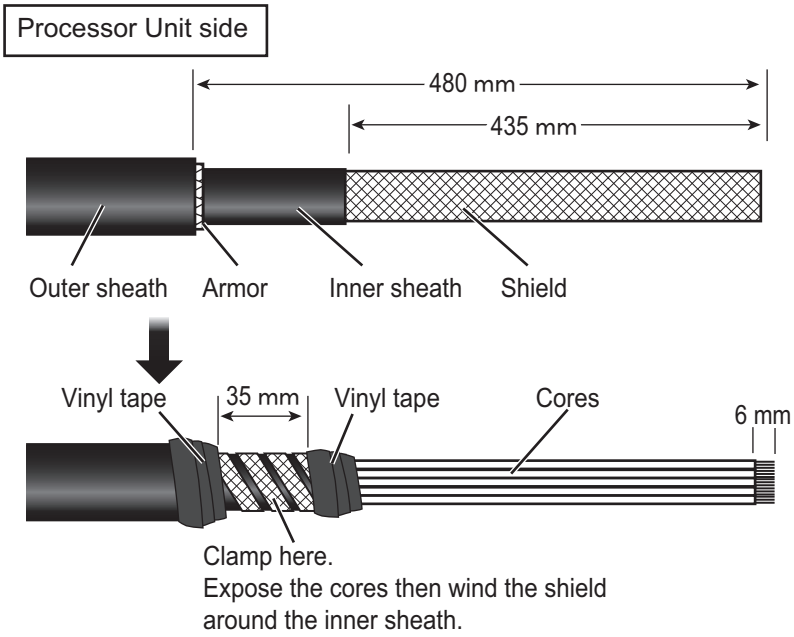

How to connect wires to a terminal connector

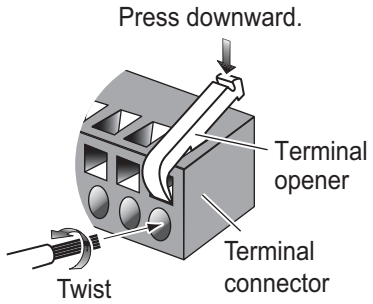

Procedure

1. Twist the cores.
2. Press the terminal opener downward.
3. Insert the wire in the hole.
4. Remove the terminal opener.
5. Pull the wire to confirm that it is secure.

LAN cable

Fabricate the LAN cable (DTIC5E350SLABVCVxxT, max 100 m), referring to the following figure. After fabricating the cable, attach the modular connector.

Note: This equipment only uses straight cables. Use a CAT5E LAN cable.

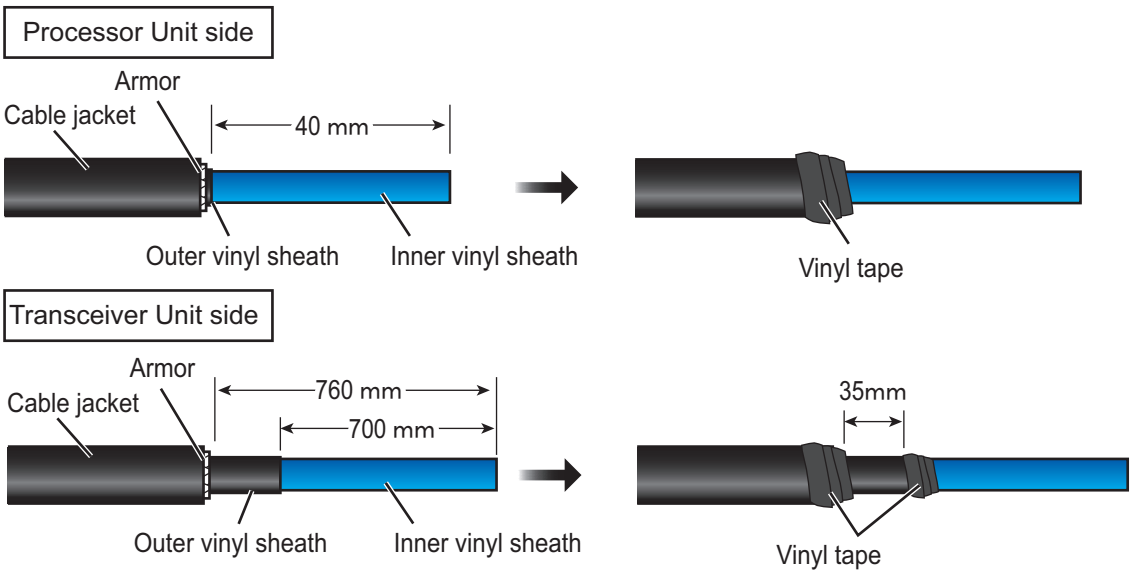

1

Expose inner vinyl sheath.

2

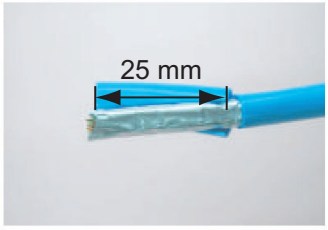

Remove the inner vinyl sheath by approx. 25 mm. Be careful not to damage inner shield and cores.

3

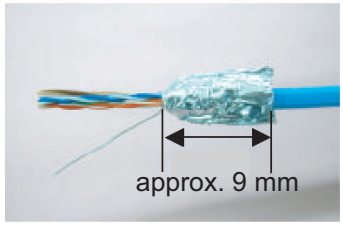

Fold back the shield, wrap it onto the inner vinyl sheath and cut it, leaving approx. 9 mm.

4

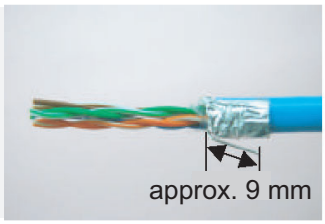

Fold back drain wire and cut it, leaving approx. 9 mm.

5

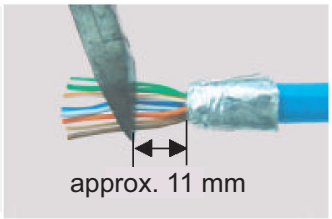

Straighten and flatten the cores in colored order and cut them, leaving approx. 11 mm.

6

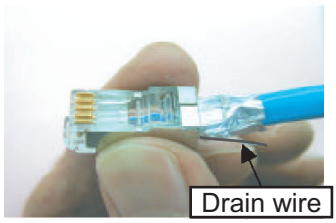

Insert the cable into the modular plug so that the folded part of the shield enters into the plug housing. The drain wire should be located on the tab side of the jack.

7

Using special crimping tool MPT5-8AS (PANDUIT CORP.), crimp the modular plug. Finally, check the plug visually.

Modular plug

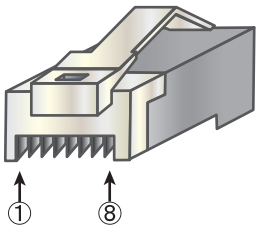

[Straight cable]

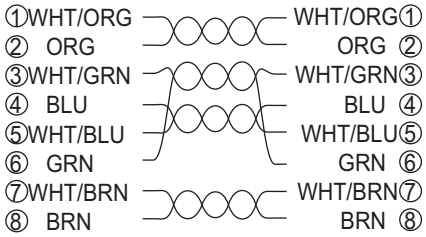

TT(P)YCSLA cable

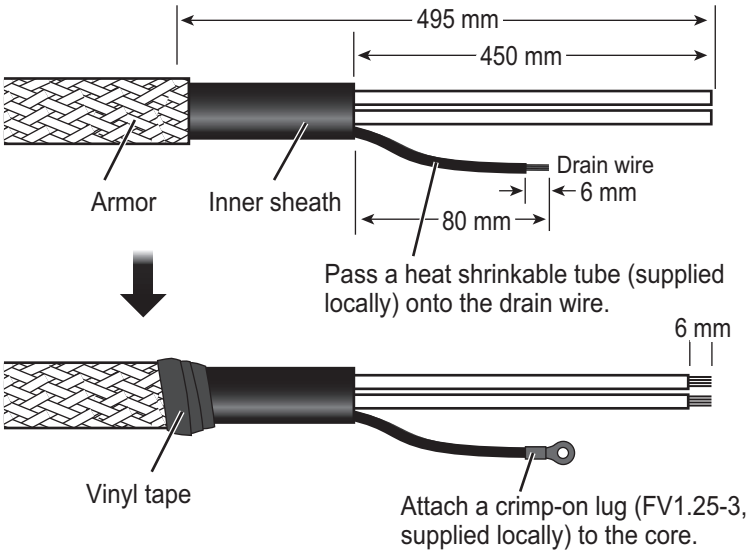

How to connect wires to a terminal connector

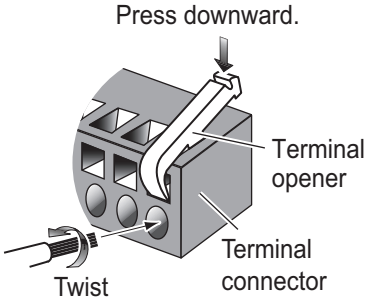

Procedure

1. Twist the cores.
2. Press the terminal opener downward.
3. Insert the wire in the hole.
4. Remove the terminal opener.
5. Pull the wire to confirm that it is secure.

2.2.4 How to change the fuse

Change the fuse in the fuse holder on the power cable according to the input voltage, referring to the following table. Fuses are supplied as spare parts.

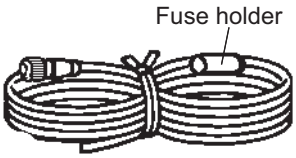

Power cable

⚠ WARNING

Use the proper fuse.

Fuse rating is shown in the table below. Use of a wrong fuse can result in damage to the equipment.

Input voltage	Rating of fuse
12 VDC	15 A (factory default)
24 VDC	7 A

2.2.5 External switch connection

External switches can be connected to the TB1 terminal in the processor unit to provide one-touch access to a desired menu item or menu. Up to four external switches, each with an individual function, can be connected.

Use a push button switch (momentary contact) for the external switch. For how to assign the function to the external switch, see the operator's manual.

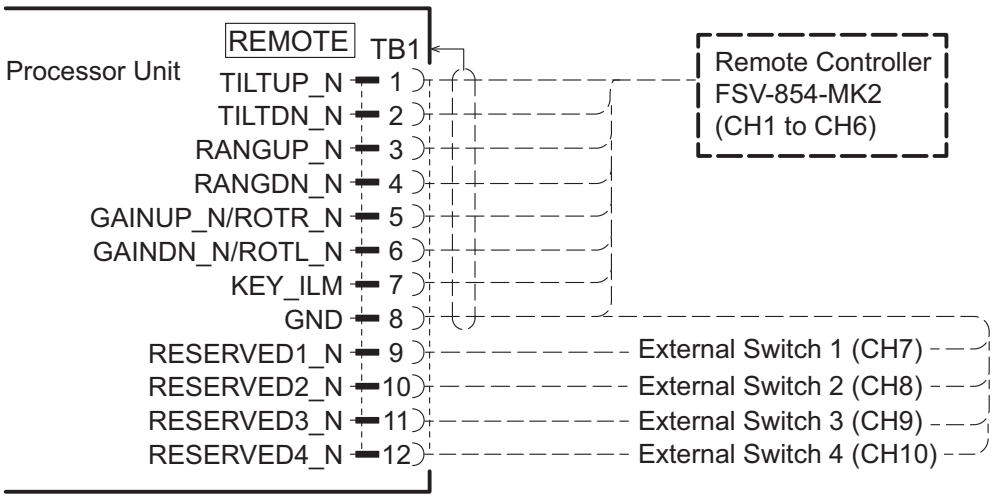

2.2.6 External KP connection

KP input

To synchronize the KP (Keying Pulse) signal from external equipment, make the connection as follows:

- When the external equipment is a current drive circuit: Use the TB8-1 and TB8-2.
- When the external equipment is a voltage drive circuit: Use the TB8-3 and TB8-4.

The signals for current and voltage drive circuit cannot be used simultaneously.

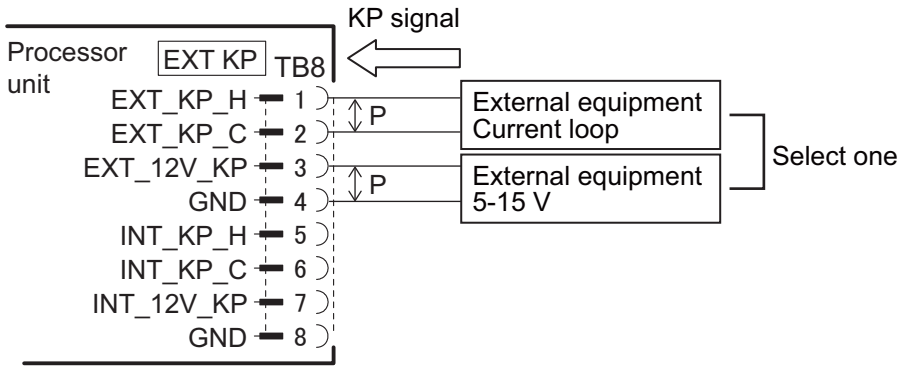

KP output

To output the KP signal from the transceiver unit to external equipment, make the connection as follows:

- When the external equipment is a current drive circuit: Use the TB8-5 and TB8-6.
- When the external equipment is a voltage drive circuit: Use the TB8-7 and TB8-8.

The signals for current and voltage drive circuit can be used simultaneously, for separate destinations.

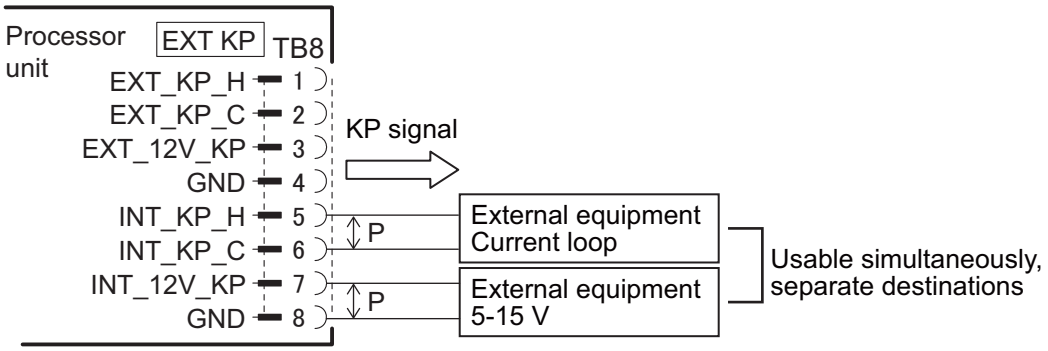

2.3 Control Unit

Connect the control unit to the J1 or J2 terminal in the processor unit.

Ground the control unit, using a ground wire (IV-1.25sq., supplied locally).

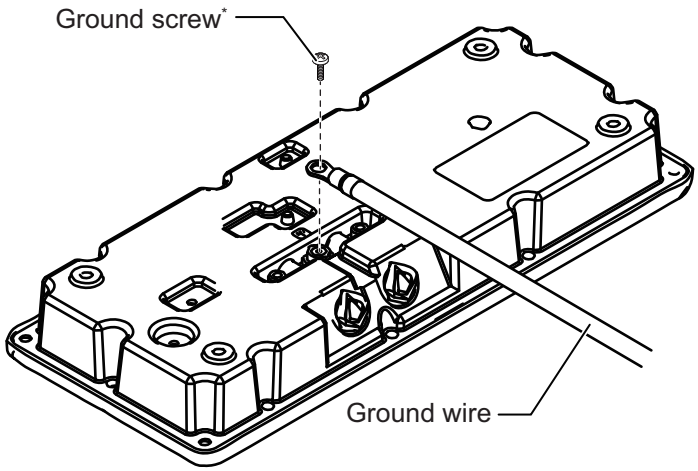

*: Pre-attached to the unit.

2.4 Transceiver Unit

Connect the cables, referring to the following figure.

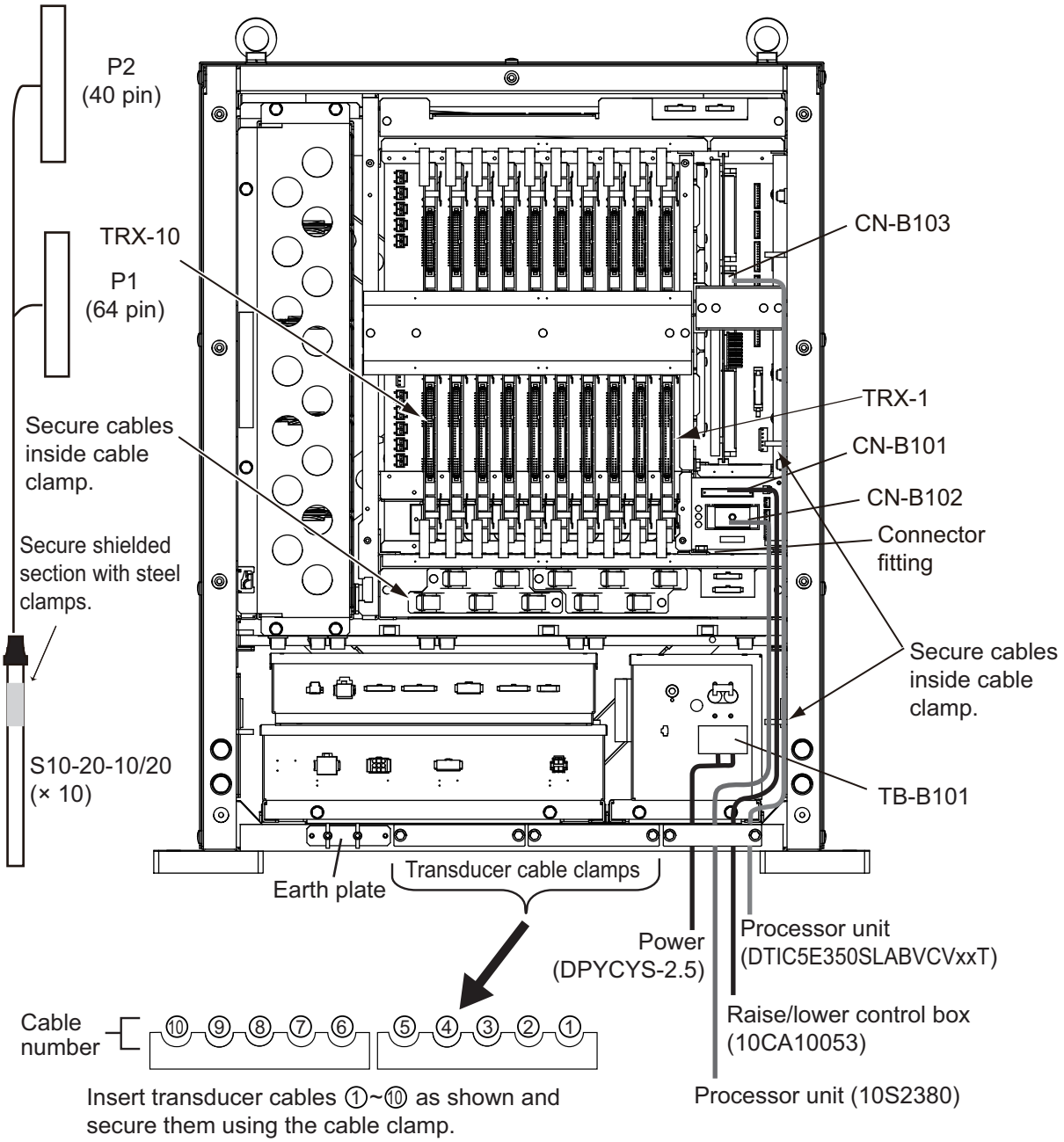

Grounding

The transceiver unit is supplied with an earth plate (50 mm width, 1.5 m length) in the installation materials. Use the two wing nuts to secure the plate and connect the transceiver ground plate to the ship's earth.

2.4.1 How to connect the processor unit

10S2380 cable

Fabricate the 10S2380 cable as shown in the following cable and pass the cable through the cable clamp on the transceiver unit, then connect to CN-B101.

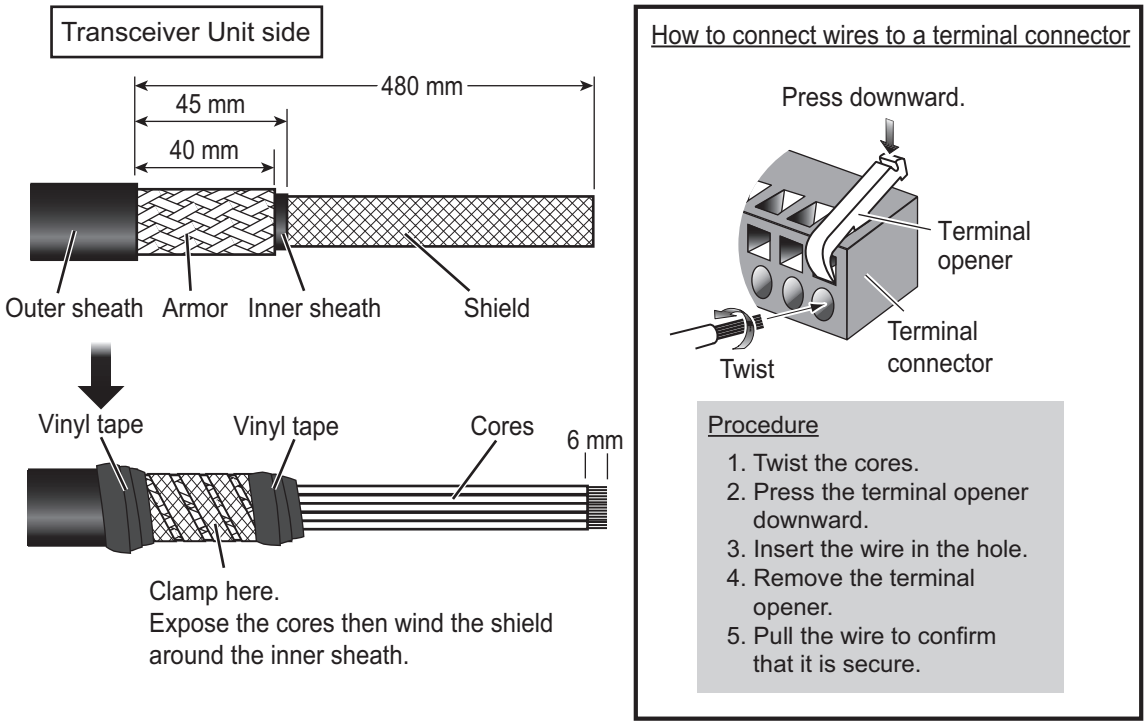

LAN cable

Fabricate the LAN cable (DTIC5E350SLABVCVxxT, max. 100 m) referring to section 2.2.3, then connect the LAN connector to the CN-B103.

2.4.2 How to connect the junction box

1. Connect the cables from the junction box referring to the cable no. labeled on the chassis and connector no. labeled on each PC board. Connect the HIF connector of the cable from the junction box to the TRX board on the transceiver unit.
2. Arrange the cables in numerical order and fix them with the cable clamp.

2.4.3 Power cable

Fabricate the power cable (DPYCY-1.5) as shown in the following figure and connect the cable to TB-B101 of the transceiver unit.

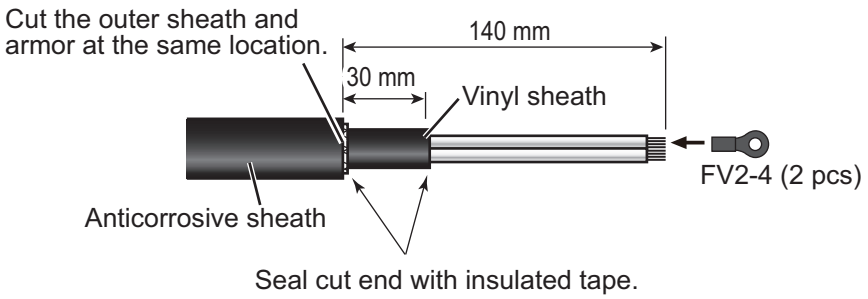

2.5 Junction Box

The junction box connects the transceiver unit to the hull unit using transducer cables (10CA10167, 10 pcs) from the transducer (hull unit) to the junction box and signal cables (S10-20-5/10/20, 10 pcs) from the junction box to the transceiver unit.

Connection

Connect the transducer cables (10CA10167, 10 pcs) from the transducer and signal cables (S10-20-5/10/20, 10 pcs) from the transceiver unit to the JCTN1 to JCTN20 board. Connect the cables referring to the cable number labeled on the connectors and connector number labeled on each JCTN board.

1. Remove the junction box cover.
2. Remove the cable clamp and the metal PC board clamp.
3. Pass the cables through the cable clamp, then secure them to the edge saddle and LWS clamp. The cables should be connected as shown in the following figure. For signal cables (S10-20-5/10/20, 10 pcs), the “To Junction Box” label side must be connected to the junction box.

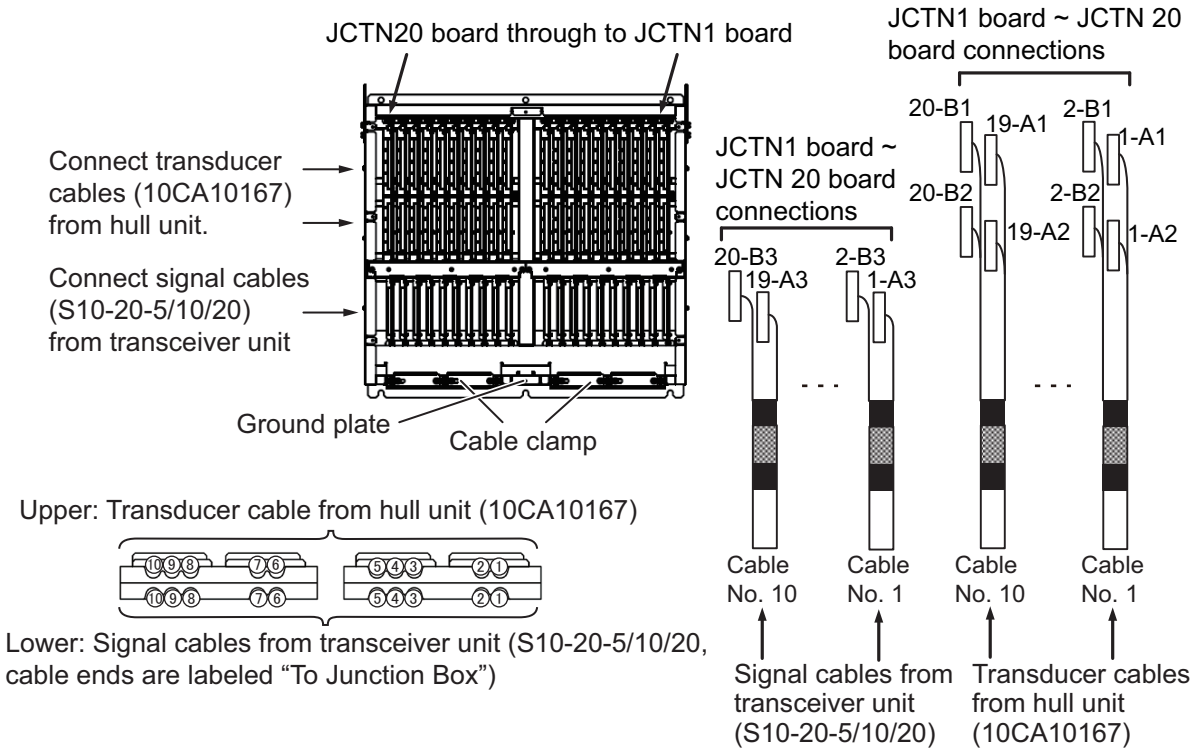

4. Place the shielded section of the cables in the cable clamp.
5. Secure the cables with the cable clamp.
6. Reattach the junction box cover.

Grounding

Secure a copper plate (local supply) to the junction box’s ground terminal, then connect the junction box ground to the ship’s ground.

2.6 Raise/Lower Control Box

Connect the 3 phase power cable and the transceiver unit cables (10CA10053 - marked with “Control Unit”) as shown below.

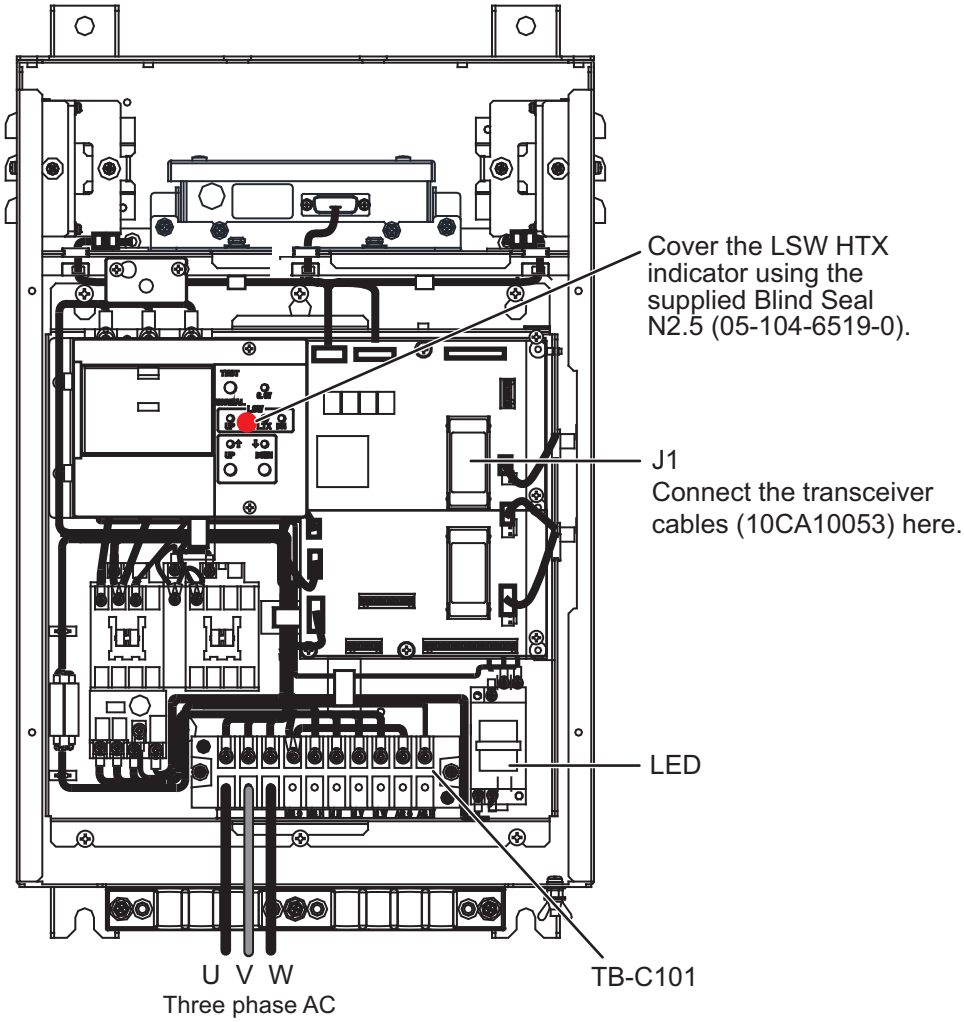

Confirm that the LED lights in red after the wiring is completed. If the LED does not light, turn the power off from the mains switchboard, disconnect then reconnect the power cables, turn the power on, and check if the LED lights. The hull unit does not work when the connection is wrong.

- **Normal phase**: LED lights in red.
- **Phase reversal**: LED does not light.

Fabricate the power cable as shown below.

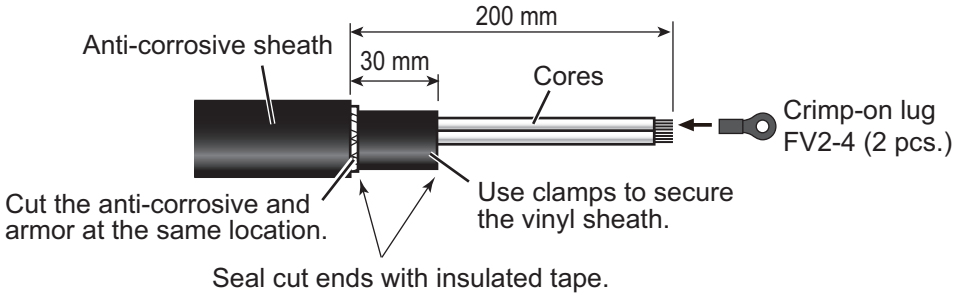

Cable clamp location

Secure the cables in the cable clamp as shown in the following figure.

Use a ground wire (IV-8 sq., local supply) to connect to the ship's ground.

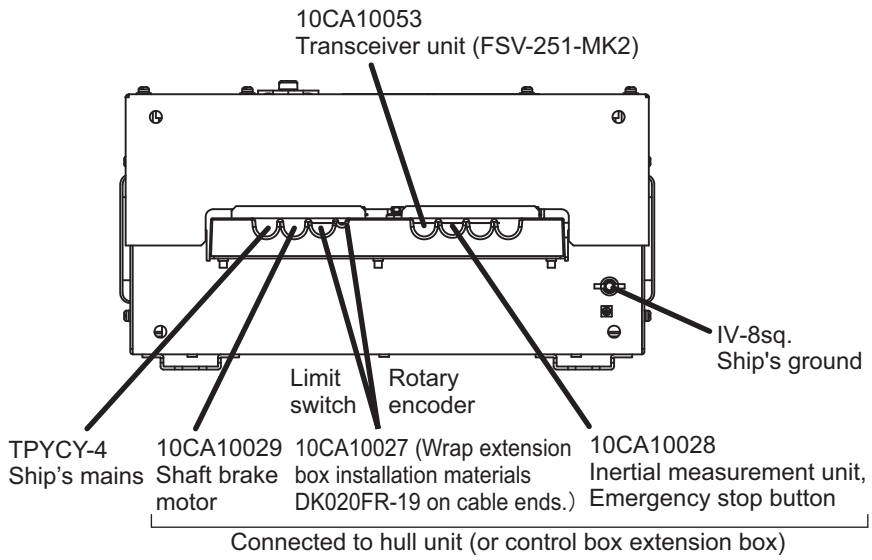

2.7 Power Supply Unit

Fabricate the power cable (DPYCY-2.5, supplied locally), referring to the following figure. Change the connector to the power supply according to the input voltage.

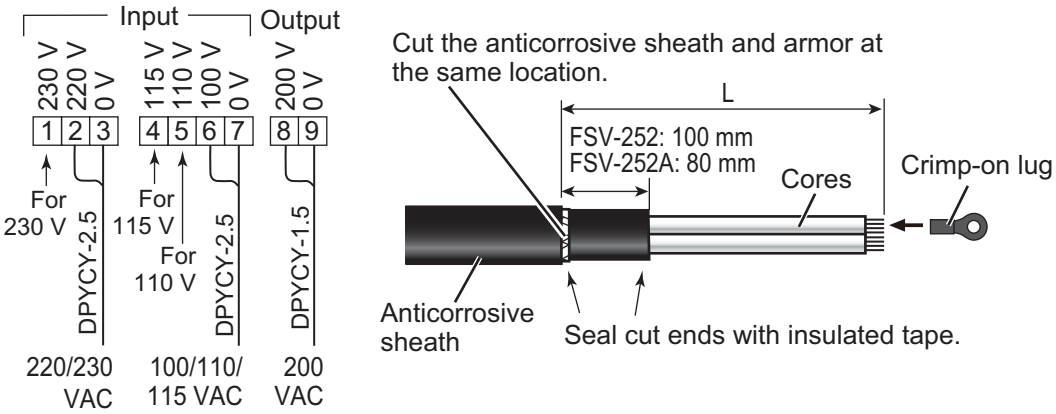

Cable	In/Out	Power source	Length of "L"		Crimp-on lug
			FSV-252	FSV-252A	
DPYCY-2.5	Input	100/110/115 VAC	250 mm	220 mm	FV2-5
		220/230 VAC	180mm	170 mm	FV2-4
DPYCY-1.5	Output	200 VAC	180 mm	160 mm	

How to secure the cable

- For FSV-252: Secure the cable with the cable lock and cable clamp to keep the cable from loosening.

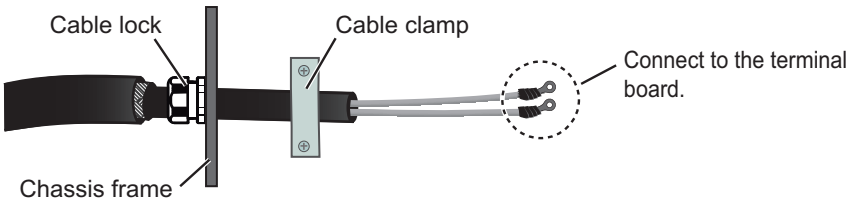

- For FSV-252A: Secure the cable using the cable clamp, so that the anticorrosive sheath projects by 10 mm from the top edge of the cable clamp.

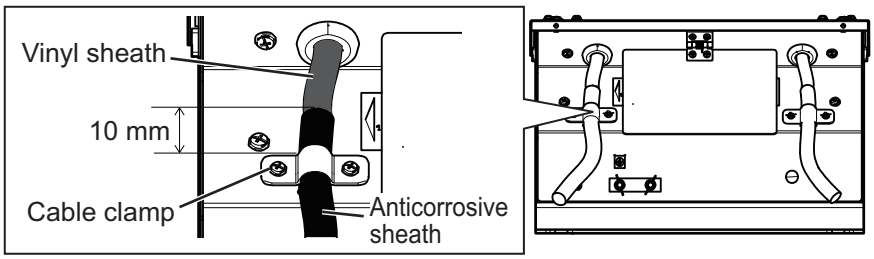

Breaker settings

⚠ WARNING

Only set one breaker to ON position at any time.

Setting both breakers to ON can result in high voltage in the unused terminal block.

The front panel of the power supply unit houses the breakers. According to the input voltage, set the breaker of the unit.

- For 100/110/115 VAC input set the double breaker on the right to ON.
- For 220/230 VAC input, set the single breaker on the left to ON.

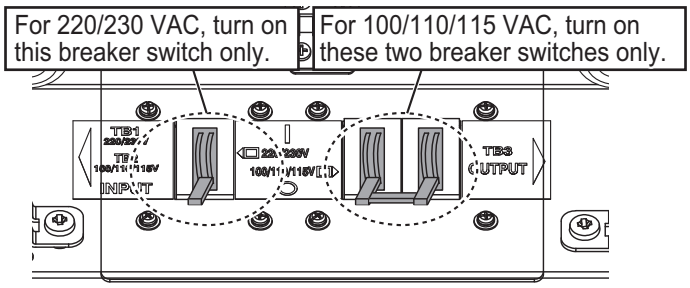

(Figure: FSV-252A)

Grounding

Secure the supplied copper plate to the power supply unit's ground terminal, then connect the power supply unit ground to the ship's ground.

2.8 Control Box Extension Box

Install the control box extension box to the hull unit when mounting the raise/lower control box separately from the hull unit.

Disconnect the raise/lower control box from the hull unit and remove the connectors from each cable to replace them with the included crimp-on lugs. Removed connectors are reused for the extension cables. Do NOT discard them.

Connect the cables that are removed from the raise/lower control box and extension cables to the terminal blocks in the control box extension box. For information on how to wire the raise/lower control box and control box extension box, see the Interconnection Diagrams at the back of this manual and wiring information sheet on the rear side of the control box extension box cover.

The crimp-on lugs to be used for each cables are as follows.

- Limit switch, **EMERGENCY STOP** button: FV1.25-3
- Rotary encoder: FV0.5-3

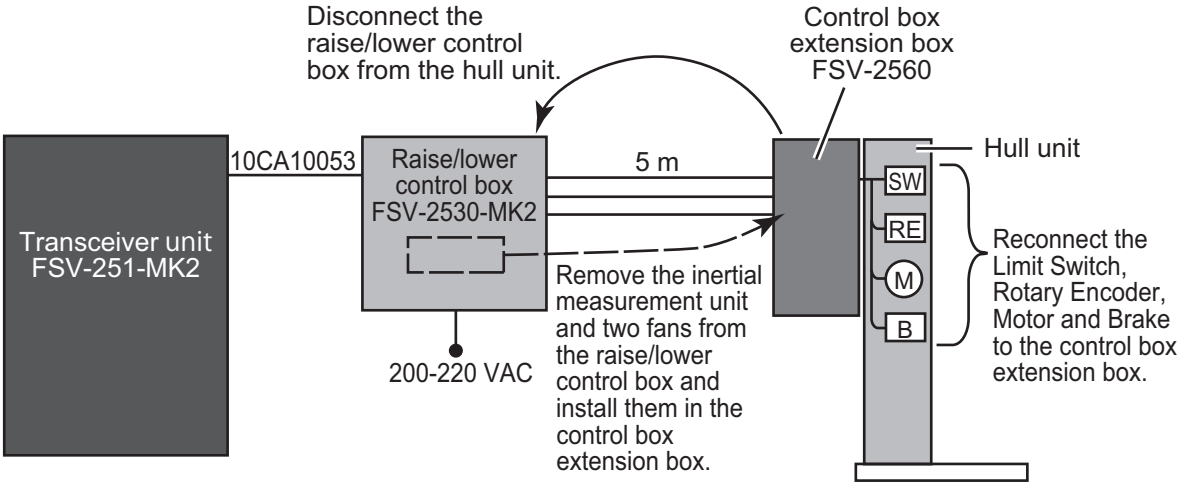

2.8.1 Cable clamp location

Secure all connected cabling in the cable clamp, referring to the following figure.

Use a ground wire (IV-8 sq., local supply) to connect to the ship's ground.

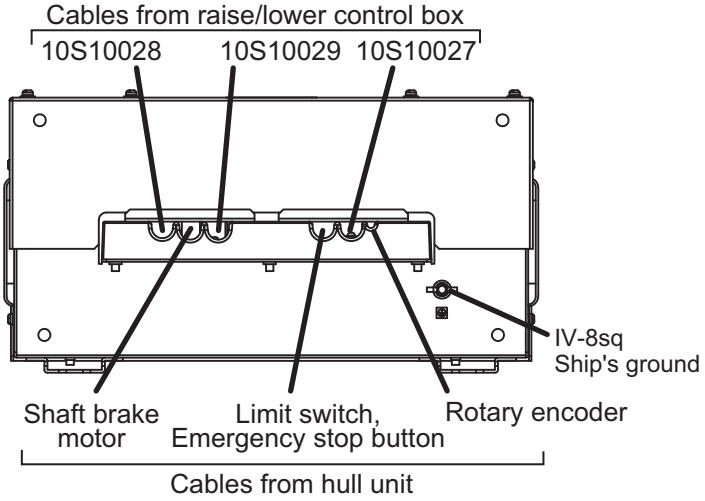

2.8.2 How to connect the fans and inertial measurement unit to the control box extension box

When using the control box extension box, the fans and inertial measurement unit from the raise/lower control box must be installed in the control box extension box. Follow the procedure below.

How to remove the fans and inertial measurement unit from the raise/lower control box

1. Unfasten six screws to remove the front cover.
2. Unfasten four screws to remove the top cover.

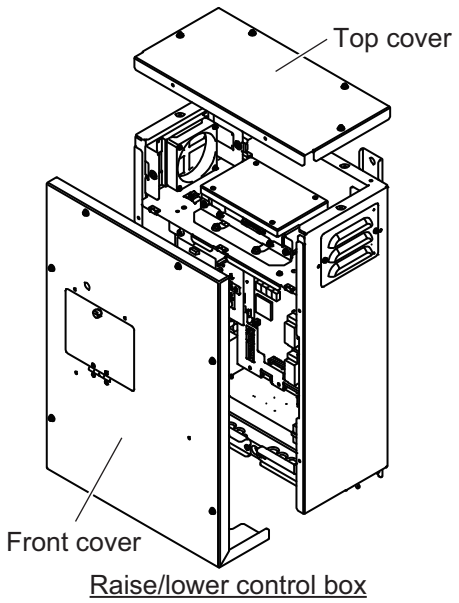

3. Disconnect the cable from the connector on the inertial measurement unit, then unfasten four screws to remove the unit.

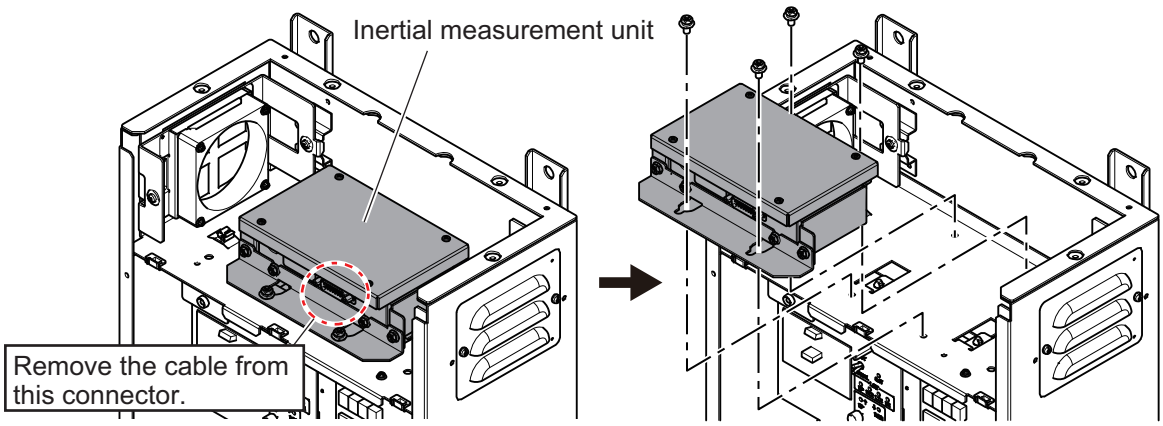

4. Disconnect the fan connectors, then unfasten screws to remove two fans.

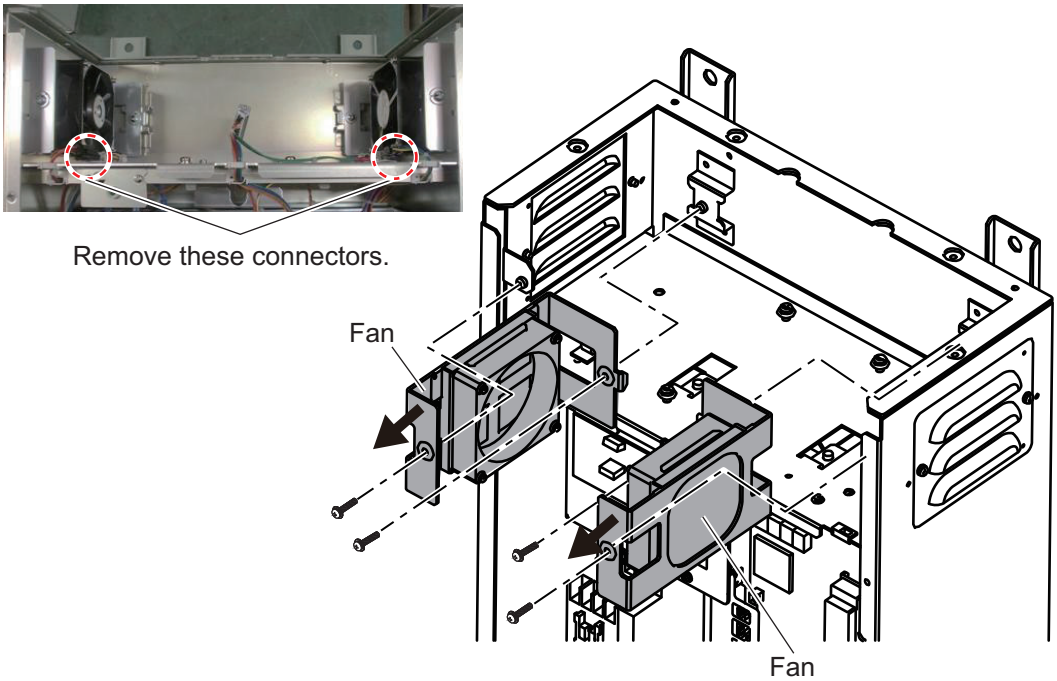

5. Reattach the top cover and front cover.

How to attach the fans and inertial measurement unit to the control box extension box

Note: The inertial measurement unit is extremely shock sensitive, take care not to drop it. Where possible, install the unit after the control box extension box has been installed.

1. Unfasten six screws to remove the front cover.
2. Unfasten four screws to remove the top cover.

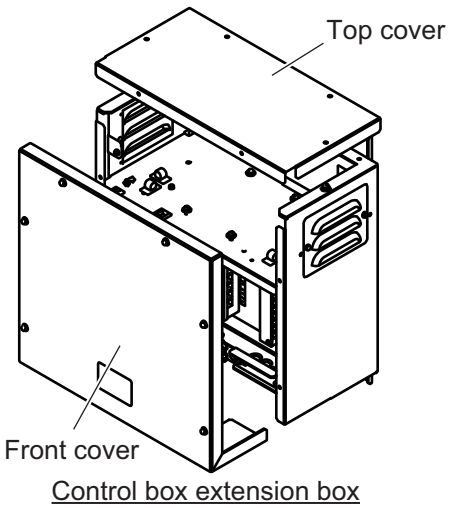

3. Install the fans in the control box extension box, using the four screws to secure them in place.

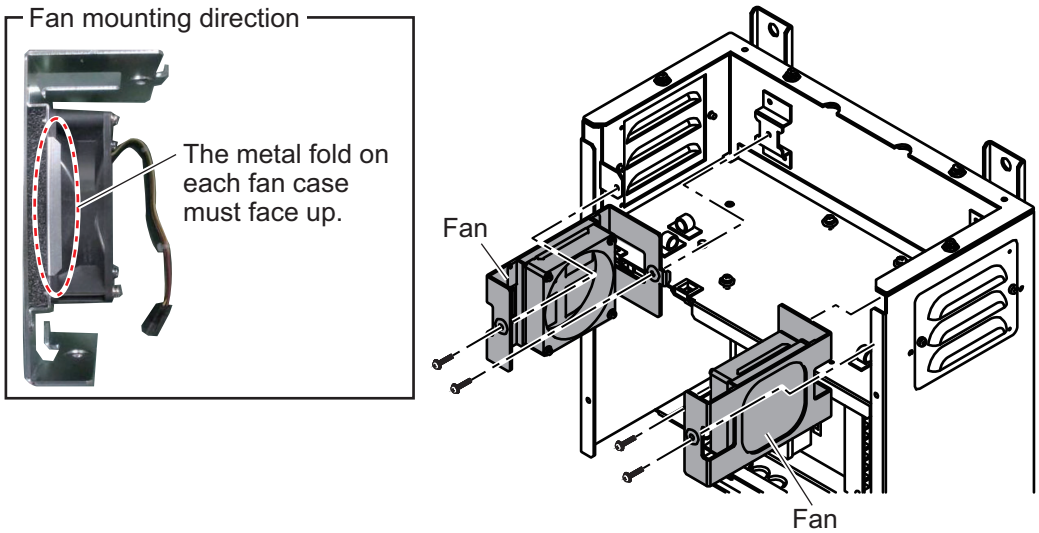

4. Connect the cables on the fan to the connector inside the control box extension box.

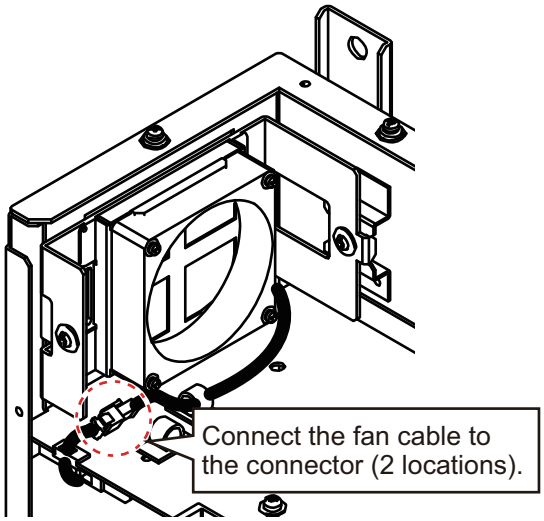

5. Unfasten four screws and set the inertial measurement unit, then fasten the screws to secure it.

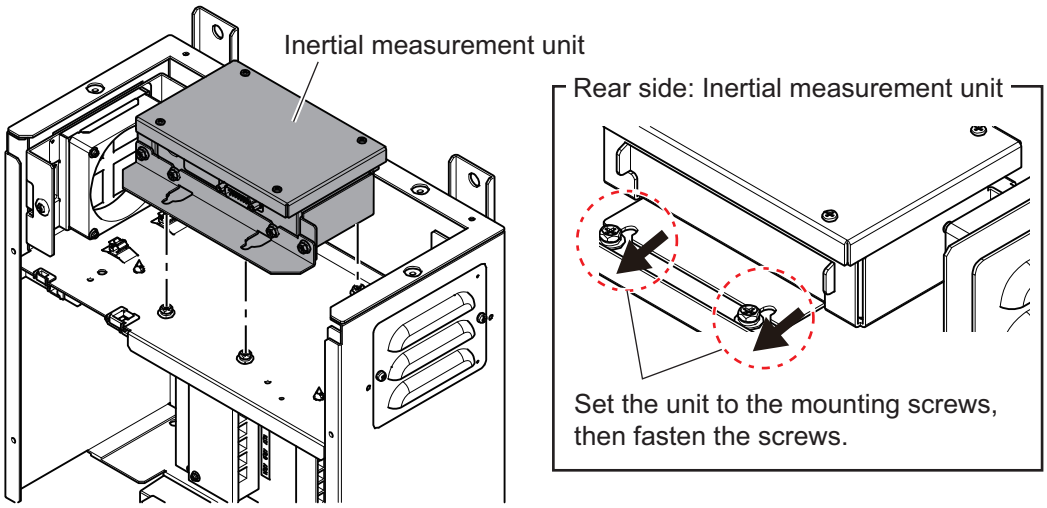

6. Connect the D-SUB connector inside the control box extension box to the inertial measurement unit.

7. Fasten the ground wire (crimp-on lug) of the D-SUB cable to the ground terminal.

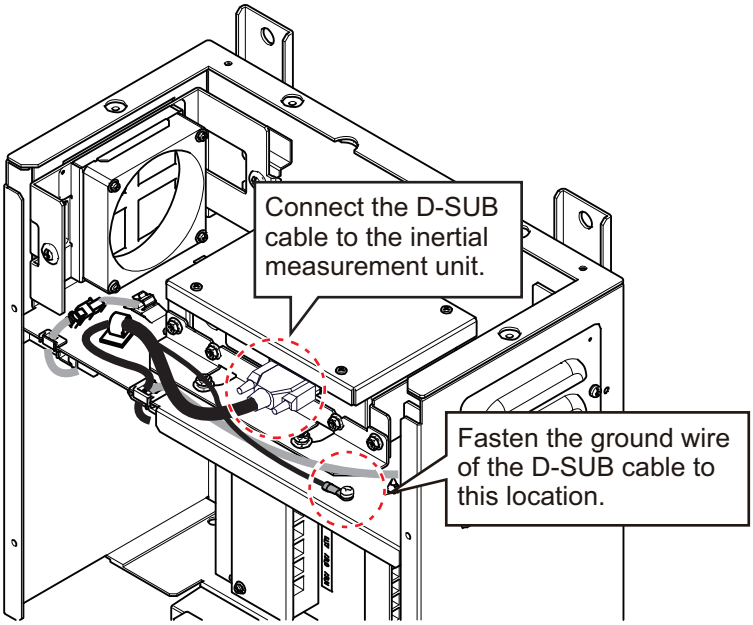

8. Reattach the top cover and front cover.

This page is intentionally left blank.

3. ADJUSTMENT AND CHECKS

3.1 DIP Switch Settings in the Processor Unit

When a monitor is connected via a video distributor or matrix switcher, the resolution may not display correctly. If this occurs, change the DIP switch settings for SW4/SW5 on the PCRI board. The changed settings fix the output to SXGA.

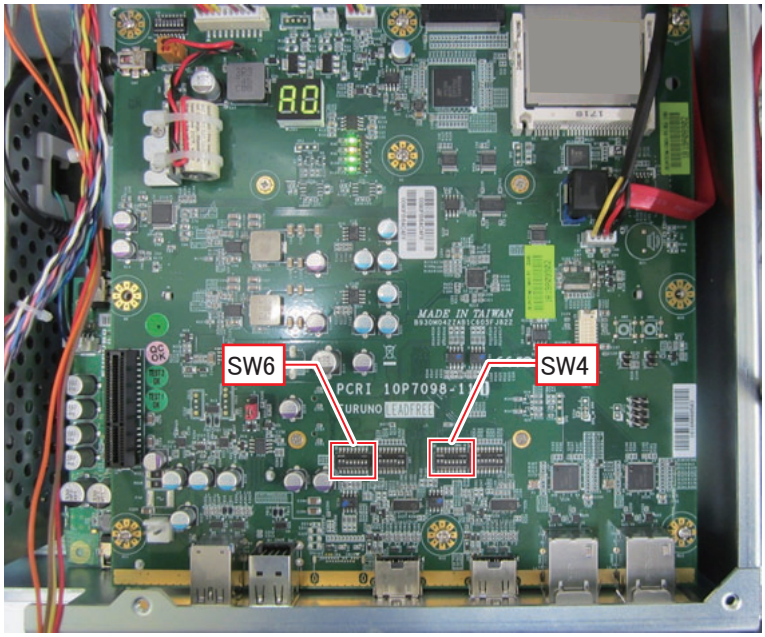

Note: Only use the settings outlined in the following table.

1	2	3	4	5	6	7	8	Remarks
DIP switch SW4 is used for setting the output resolution from HDMI1.								
ON	ON	OFF	OFF	OFF	OFF	OFF	OFF	HDMI1 port outputs at the maximum resolution of the monitor connected to the processor unit (factory default).
OFF	OFF	ON	ON	OFF	OFF	OFF	OFF	HDMI1 port outputs SXGA.
DIP switch SW6 is used for setting the output resolution from HDMI2.								
ON	ON	OFF	OFF	OFF	OFF	OFF	OFF	HDMI2 port outputs at the maximum resolution of the monitor connected to the processor unit (factory default).
OFF	OFF	ON	ON	OFF	OFF	OFF	OFF	HDMI2 port outputs SXGA.

3.2 How to Set the Language

This equipment is shipped with English set as the default language. To change the language in which the menus are displayed, follow the procedure below.

The following languages are supported:

English	Spanish	Korean
Japanese	Russian	Turkish
French	Chinese	Icelandic

1. Turn the power to the equipment on. After the startup procedure is complete, the menu is available.
2. Press the **MENU/ESC** key to open the menu. The main menu window will be displayed.

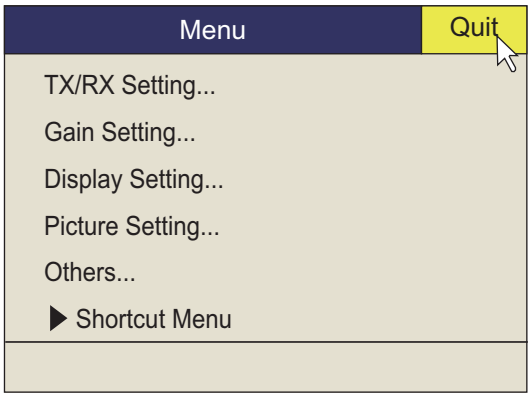

3. Left click [Others].
4. Left click [Initial Settings].
   The confirmation dialog pop-up window appears.
5. Left click [Changeable] in the pop-up window.
6. Left click [Language] to display the available languages.
7. Select the appropriate language.
8. Left click [Quit].
9. Long-press the **MENU/ESC** key to close all menus.

3.3 How to Register the Transducer Position

To display the distance which the transducer is protruded, the limit switch location must be entered at the processor unit.

To conduct this setting, the transducer must be at full protrusion. Also, confirm that the transducer is retracted before conducting this procedure.

1. Press the **MENU/ESC** key to open the menu. The main menu window will be displayed.
2. Left click [Others].
3. Left click [Initial Settings].
   The confirmation dialog pop-up window appears.
4. Left click [Changeable] in the pop-up window.
5. Left click [Reg. TD Pos.].

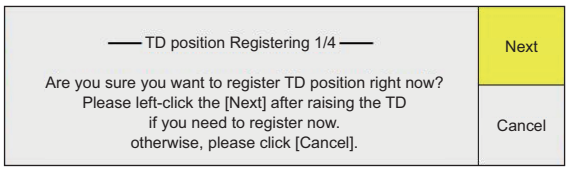

Note: If the transducer position is already registered, the following message appears. To re-register the transducer position, left click [Next].

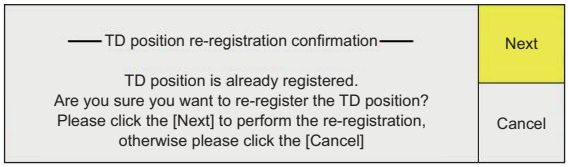

6. Confirm that transducer is retracted, then left click [Next].

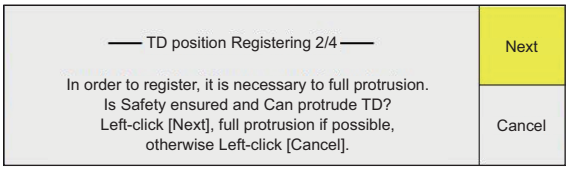

7. Confirm that the transducer can be protruded fully, then left click [Next].

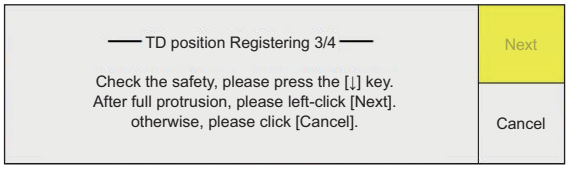

8. Check the safety and press the ⬇ (Full-protrude) key to protrude the transducer.
9. When the transducer is at full protrusion, then left click [Next].

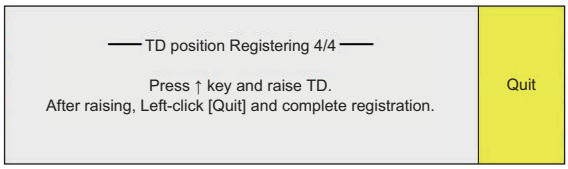

10. Press the ⬆ (Retract) key to retract the transducer.
11. Left click [Quit] to close the message.

Note: If transducer registration is aborted for any reason, the following message appears. Left click [Quit] to close the message and restart the procedure once safety is ensured.

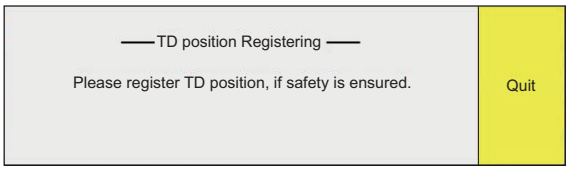

3.4 Hull Unit Checks

When performing maintenance to the hull unit and checking the movement, make sure that the power is on only to the hull unit and perform all checks in test mode to avoid accident or injury.

Make sure all connections to the hull unit are made correctly, referring to the wiring table attached to the hull unit, to prevent the shaft from being dislodged.

How to check transmit status

Transmission is set to [OFF] as factory default. You can check and change the status by doing the following.

Note: To avoid damage to the equipment, do NOT transmit while dry docked.

1. Press the **MENU/ESC** key to open the menu. The main menu window will be displayed.

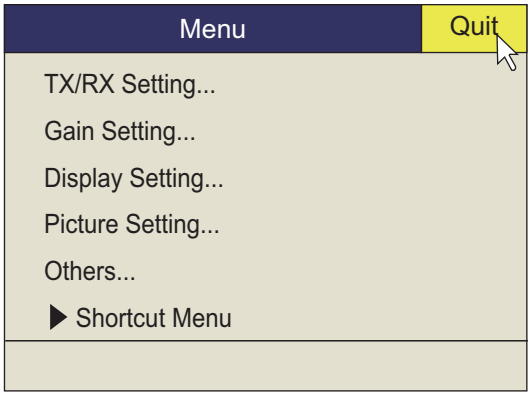

2. Left click [Others].

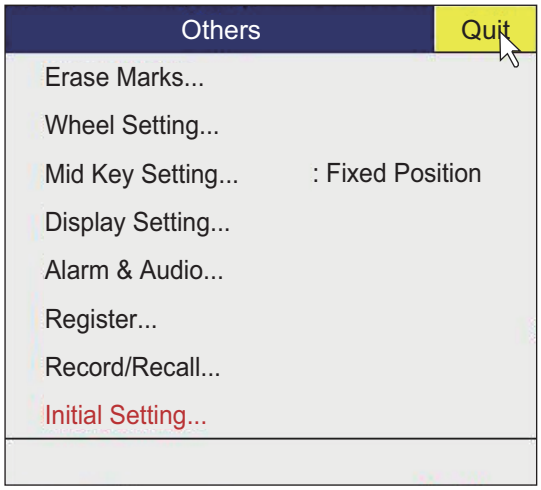

3. Left click [Initial Settings].
   The confirmation dialog pop-up window appears.
4. Left click [Changeable] in the pop-up window.

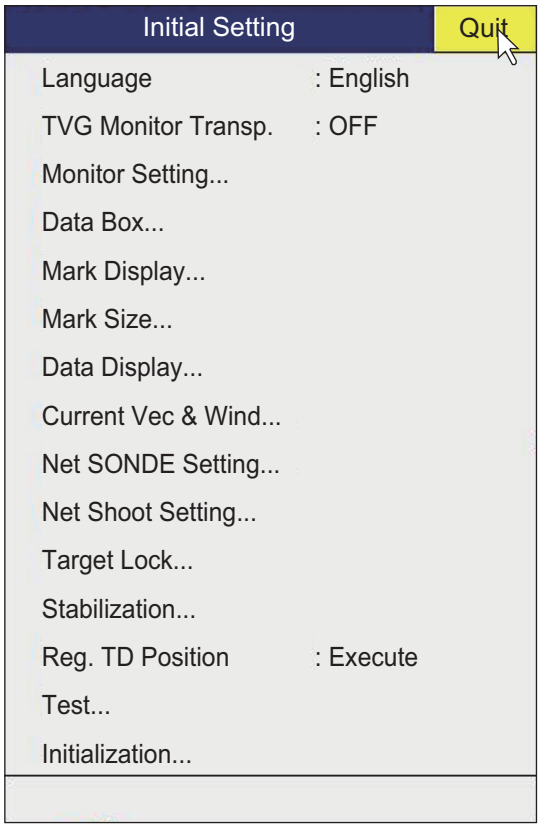

5. Left click [Test].

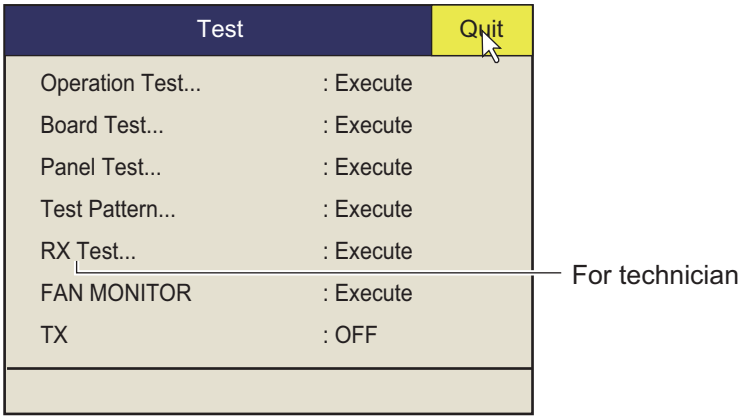

6. Left click [TX].
7. Select [OFF] or [ON] as appropriate, then press the left button.
8. Left click [Quit] to apply the settings.
9. Long-press the **MENU/ESC** key to close all menus.

How to check the hull unit

1. Press the power key to turn the power on, then check that the LEDs located to the left of the power key and ⬆ (Retract) key are turned on.

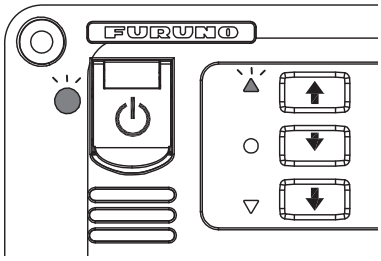

2. Confirm that the “3.3 V” and “UP” LEDs on control panel of the raise/lower control box are on.

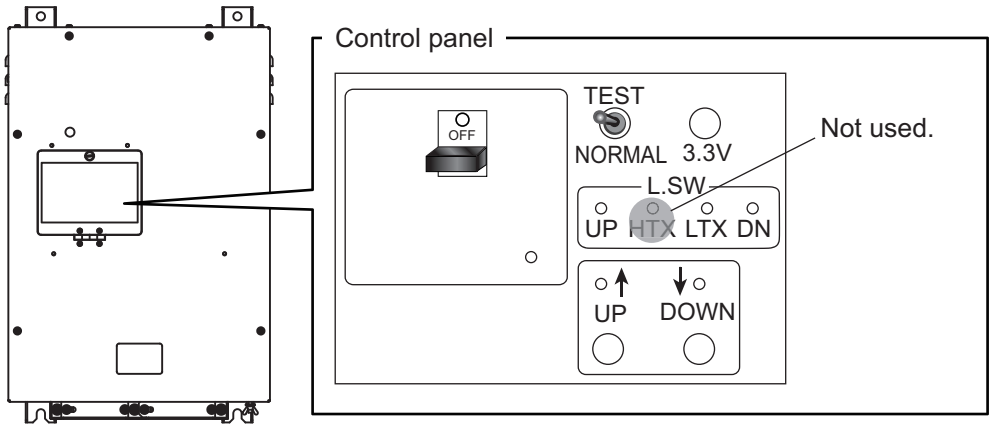

3. Remove the cover of the raise/lower control box and check the terminal voltage as shown in the table below.

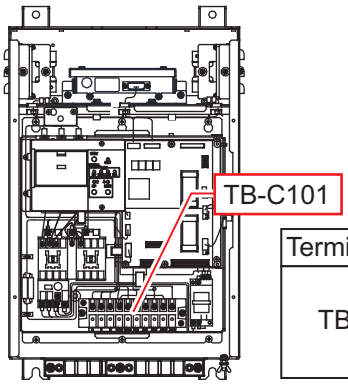

Terminal block	Terminal No.	Voltage
TB-C101	(1)-(2)	220 VAC
	(2)-(3)	220 VAC
	(1)-(3)	220 VAC

4. Set the **TEST/NORMAL** switch on the control panel to [TEST], then press the **DOWN** switch to confirm that the transducer lowers. Also, while the transducer is being lowered, check that the “LTX” LED lights when the TX limit switch is passed by the transducer shaft.
   Note: The TX limit switch does not stop the transducer when the **TEST/NORMAL** switch is in the [TEST] position.
5. Release the **DOWN** switch during lowering to confirm that the transducer stops lowering.

6. Press the **DOWN** switch again to continue lowering. Confirm that the transducer stops at the moment when the **EMERGENCY STOP** button is pressed. After you have confirmed the **EMERGENCY STOP** button stops the hull unit lowering, release the **EMERGENCY STOP** button by turning the switch clockwise.

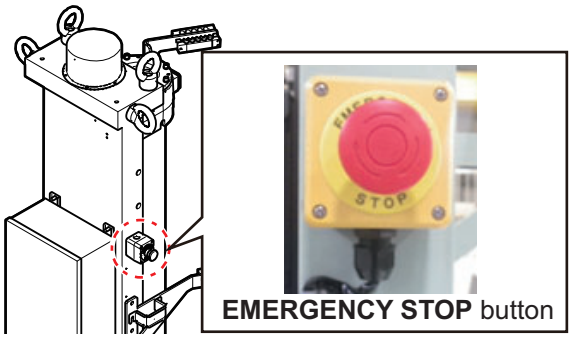

7. Press the **DOWN** switch again to continue lowering. Confirm that the transducer stops at the moment when the lower limit switch is pressed.
   During this process, via the side window on the raise/lower control box, check the LEDs inside the casing and that the following values are displayed.

Hull unit	Upper limit switch is ON	Lower limit switch is ON
1600 mm travel	0	98 ~ 101
1200 mm travel	0	73 ~ 76

   In cases where the LEDs do not display the above values, rectify the issue using the table on the following page for reference.

LED display	Possible cause	Remedy
Displayed values do not change.	Cabling not connected.	Connect cabling correctly.
Displayed values are negative.	Cabling is not connected correctly.	Re-connect cabling correctly.
Displayed value deviates from normal value.	Limit switch position has moved.	Re-position the limit switch.

   When you change the limit switch position intentionally, the LEDs do not display the above values. If the issue cannot be rectified, the equipment may malfunction. Contact your dealer to check the equipment.

8. Repeat the same tests while retracting the transducer.

9. Remove the ratchet wrench from its holder on the hull unit. Press the **UP** switch, then the **DOWN** switch on the raise/lower control box to make sure the hull unit does not move. Once you have confirmed there is no movement in the hull unit, place the ratchet wrench back in its holder.

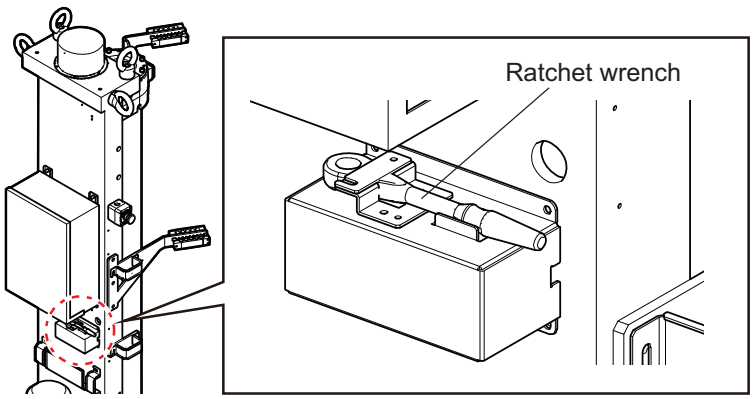

10. Check the following items in the control panel:
    - Each of the LEDs, for UP, LTX and DN, light up when their respective limiter switch is pressed.
    - “UP” LED lights when the **UP** switch is pressed.
    - “DOWN” LED lights when the **DOWN** switch is pressed.

11. When the above tests are complete, switch the [TEST/NORMAL] switch back to [NORMAL] on the control panel.
12. On the control unit, press the ⬇ (mid-protrusion) key and check that the hull unit is lowered to the half-way point. This must be done from a fully retracted position.

    While lowering, check that the LED on the left of the ⬇ (mid-protrusion) key is flashing, the limiter makes a short beep sound and once the shaft stops at half-protrude the LED lights constantly.
13. Adjust the LTX switch setting to allow clear transmission at half-protrusion by doing the following. If the retraction tank has been cut at 1212 mm, skip to step 14.
    1) Use the protrude/retract controls to adjust the transducer height until the transducer face is fully protruded.
    2) Adjust the location of the LTX switch so that the switch lever is the same height as the top of the transducer shaft bar.
       Calculate the mid-protrusion position (A) by the tank length (T), referring to the following formula.
       - A = T - 336 mm

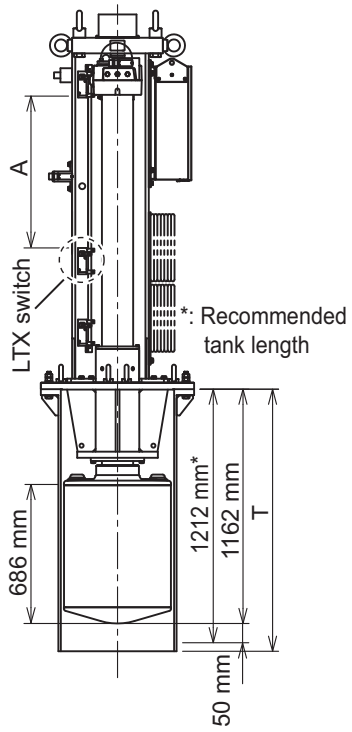

14. Using the same method, check that the ⬇ (Full-protrude) key and the ⬆ (Retract) key LEDs flash and light constantly as appropriate and the limit switch beeps.
15. Press the power key on the control unit to turn the power off and check that the transducer is retracted automatically. At full retraction, check that the power is OFF.
16. Check that the transducer is fully retracted using the ⬆ (Retract) key.

Brake test

Check that the brake is functioning correctly using the brake release switch and the procedure outlined below.

1. Set the toggle switch in the raise/lower control unit to MBRAKE (motor brake).
2. Make sure the brake LED is turned on.
3. Press the brake release switch and check that the shaft does not move.
   If the shaft moves, the brake which is not released may be malfunction. Consult your dealer for repairs. Also, if the shaft moves faster than the designated speed, the 7-segment LED shows [Err0].
4. Set the toggle switch to ABRAKE (drive shaft brake), then repeat steps 2 and 3.

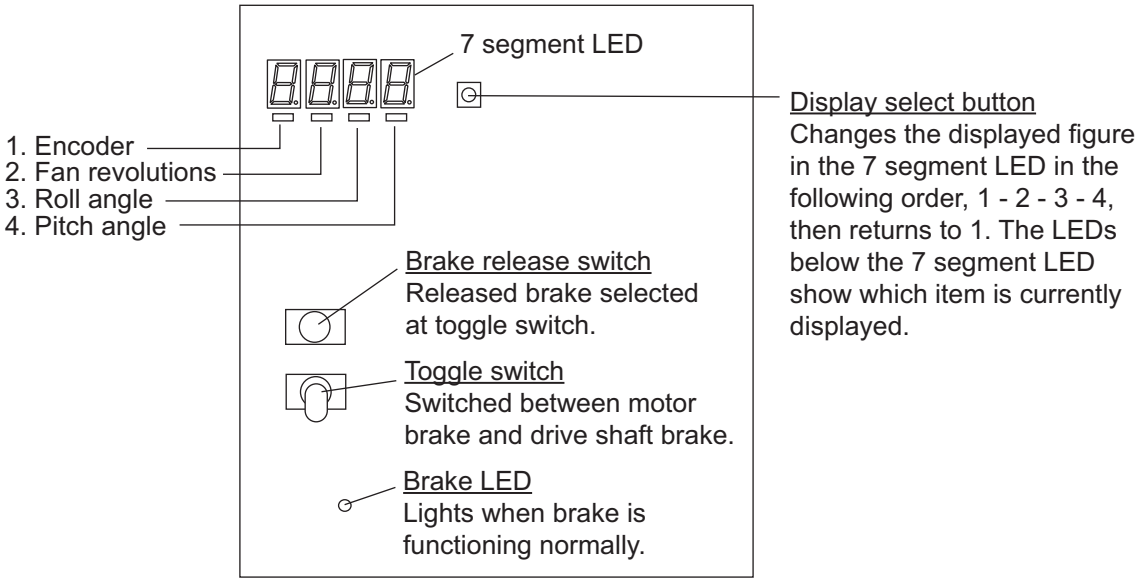

Fan motor and inertial measurement unit test

By changing the item displayed on the 7 segment LED, you can test the fan motor and inertial measurement unit. By pressing the display select button (shown in the figure above), you can change the displayed item. Use the following procedure to test the fan motor and inertial measurement unit.

1. Press the display select button in the raise/lower control box to show the fan revolutions.
2. Confirm the fan revolutions are at 35 or higher. If they are lower than 35, there may be something wrong with the fan.
3. Press the display select button to show the roll angle.
4. Rock the vessel and then check that the 7 segment LED displays a change.
5. Press the display select button to show the pitch angle.
6. Rock the vessel and check that the 7 segment LED displays a change.
7. With the test completed, press the display select button to show the encoder revolutions.

3.5 How to Adjust the Heading

Heading correction at the hull unit

When the BOW mark on the flange of the hull unit can not be directed toward ship's bow perfectly, adjust the heading so an echo which is dead ahead appears dead ahead on the display.

1. Enable transmission as shown in "How to check transmit status" on page 3-4.
2. Find a target in the bow direction (buoy, for example) and display it on a near range. If the target appears at 12 o'clock, the heading alignment is correct. If it does not, measure the error and go to next step.

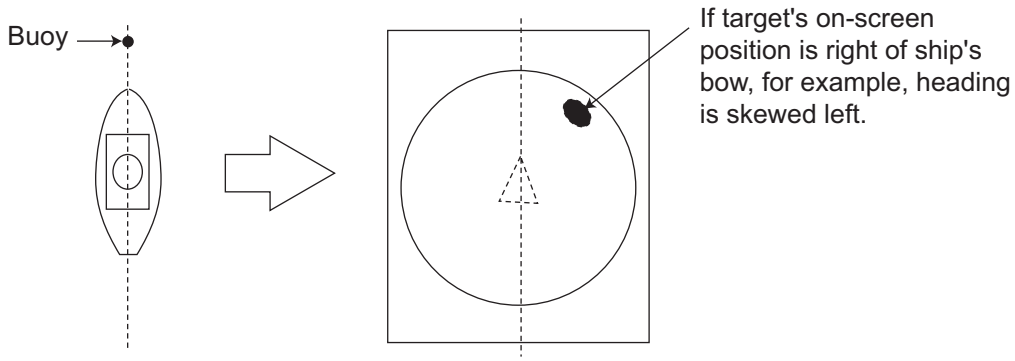

3. Access the system menu, referring to section 3.9.1.
4. Left click [Others].
5. Left click [Others].
6. Left click [Heading Adjust 1].
7. Adjust the setting so that the target selected at step 2 appears at the 12 o'clock position on-screen. The setting range is -180°to 179°, in one-degree increments. A positive value corrects the heading in the clockwise (right) direction, a negative value corrects in the counterclockwise (left) direction.
8. Left click [Quit].
9. Left click [Heading Adjust 2].
10. Adjust the heading correction at the inertial measurement unit.
    - If the raise/lower control box or control box extension box, which contains the inertial measurement unit, is mounted on the hull unit, set the same heading correction as entered for [Heading Adjust 1].
    - If the control box is mounted independent of the hull unit, set the angle measured from the bow in the clockwise direction. The angle is 0° if the lid of the control box is directed toward ship's stern precisely.
11. Left click [Quit].
12. Long-press the **MENU/ESC** key to close all menus.

3.6 How to Configure the Own Ship Mark

Set your ship's length and width and the position of the transducer, to accurately display the own ship mark on the screen.

1. Access the system menu, referring to section 3.9.1.
2. Left click [Others].
3. Left click [Own Ship Mark].
4. Left click [Ship's Length].
5. Adjust the ship's length. (Setting range: 15 to 150 m)
6. Left click [Quit].
7. Set the [Ship's Width] and [TD Position 1 (or 2)] similarly.
   - **[Ship's Width]:** The width of the ship at its widest point. (Setting range: 5 to 30 m)
   - **[TD Position 1]:** Distance from transducer to bow. (Setting range: 5 to 50 m)
   - **[TD Position 2]:** Distance from transducer to keel. Select [+] for starboard, [-] for port. (Setting range: -10 to 10 m)
8. Long-press the **MENU/ESC** key to close all menus.

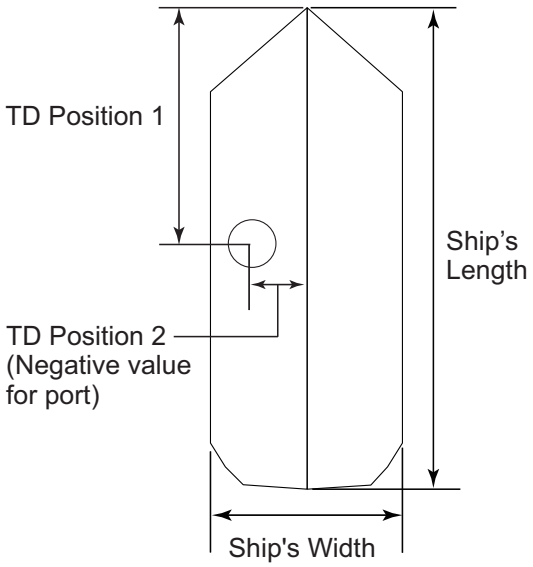

3.7 How to Select Monitor Resolution

Select the monitor resolution as follows.

1. Press the **MENU/ESC** key to open the menu, then left click [Others] → [Initial Settings] → [Changeable] → [Monitor Settings].
2. Left click [Monitor Resolution].
3. Left click [SXGA], [UXGA] or [WUXGA] as applicable.
   - [SXGA]: 1280 × 1024 dots
   - [UXGA]: 1600 × 1200 dots
   - [WUXGA]: 1920 × 1200 dots
4. Left click [Quit].
5. Turn off and on the power, then resolution setting is reflected.

   Note: After changing the monitor resolution, the size and display position of vertical display will change. Proceed with Monitor Setting as appropriate.

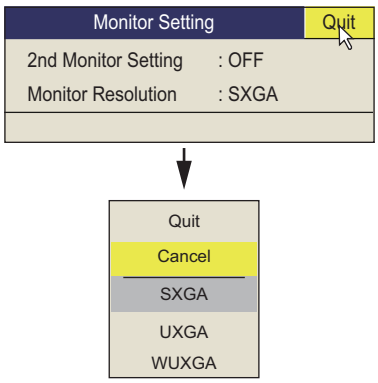

3.8 How to Set Up a Secondary Monitor

When a secondary monitor is connected, use the following procedure to adjust the display settings.

1. Press the **MENU/ESC** key to open the menu, then left click [Others] → [Initial Settings] → [Changeable] → [Monitor Settings].
2. Left click [2nd Monitor Setting].
3. Select [Dual Display] or [Sub Display] as appropriate, then left click.
   - [Dual Display]: When in Dual mode, each display can be assigned as Main or Sub monitor.
   - [Sub Display]: Displays the same screen as the Main or Sub monitor

   When there is no secondary monitor connected, set this option to [OFF].

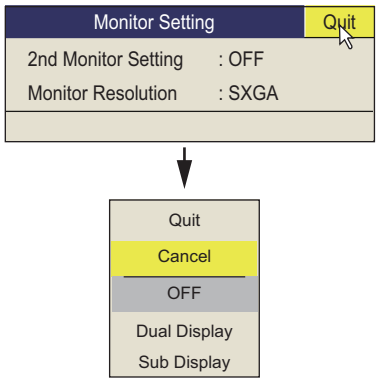

4. Left click [Quit].
5. Turn off and on the power, then resolution setting is reflected.

3.9 System Menu

3.9.1 How to access the system menu

The system menu is used by FURUNO technicians to set up and maintain the unit. This menu should not be accessed otherwise. Use the following procedure to access the system menu items. (System menu items appear to the right of the regular menus.)

1. Turn the power to the unit on, then, with no menus displayed on screen, proceed to next step.
2. While pressing and holding down the **MENU/ESC** key, press **1/F1**, **3/F3**, **5/F5** key in order.
3. Release the **MENU/ESC** key, then press the **MENU/ESC** key twice.
4. Left click [Others].
   The system menu items are displayed to the right side of the normal [Others] menu.

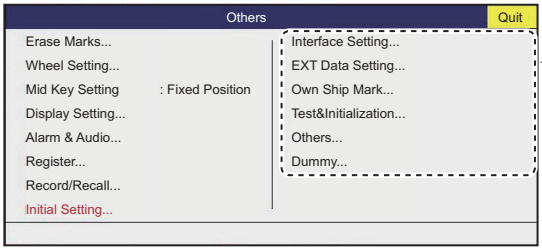

System menu is displayed as part of the [Others] menu.

Repeating the above procedure will hide the system menu items.

3.9.2 [Interface Setting] menu

- **[NMEA1 Baud Rate]** to **[NMEA5 Baud Rate]:** Set the transmission rate for the NMEA1 to NMEA5 ports. (4800 bps, 9600 bps, 19200 bps, 38400 bps.)

3.9.3 [EXT Data Setting] menu

- **[Date&Time]:** Select the input format for date and time data. (NONE, NMEA)
- **[Heading]:** Select the input format for heading data. (NONE, AD10, NMEA)
- **[Speed&Course]:** Select the input format for ship's speed and course data. (NONE, NMEA (SOG), NMEA (STW))
- **[Speed Sensor]:** Select the input format for speed data. When [GPS/DR] is selected, use a GPS whose response is fast.
  (NONE, GPS/DR, DOPPLER/DR)
- **[Lat/Lon]:** Select the input format for position data. (NONE, NMEA)
- **[Water Depth]:** Select the input format for water depth. (NONE, NMEA)
- **[Water Temp]:** Select the input format for water temperature. (NONE, NMEA)
- **[Water Current]:** Select the input format for water current. (NONE, NMEA)
- **[Wind]:** Select the input format for wind data. (NONE, NMEA)
- **[Net Depth]:** Select the input format for net depth data. (NONE, NMEA)

3.9.4 Other menu items

This section gives a brief explanation of menu items not previously described.

- **[Trackball Speed]:** Select the tracking speed (in menu windows only) for the trackball. (Slow, Normal, Fast)
- **[Hull Unit Stroke]:** Select the travel of the hull unit. (1200 mm, 1600 mm)
- **[Monitor Sel.]:** For developers only. Selects monitor to display signal data.
- **[Data Display]:** Turn Date and Time display on or off.
- **[Setting Disp.]:** Displays current fishing settings on the left-hand side and right-hand side of the screen as abbreviations.
- **[T_parameter]:** For developers only. Contains evaluative functions.
- **[Error Code List]:** Displays a list of error codes for easy error identification.
- **[Explorer]:** Check and search files.
- **[NMEA Monitor]:** Accessed via system menu → [Others] → [Test & Initialization] → [NMEA Monitor]. The NMEA Monitor functions as a test tool for NMEA sentence input and output.
- **[Channel Test 3]:** Accessed via system menu → [Others] → [Test & Initialization] menu → [Channel Test 3]. Tests the connection between the transducer and the junction box for faults. After installation is completed, conduct this test to ensure the connection is correct. Faults in connection or wiring are displayed in black.

3.10 Connection with Maxsea TZ Professional

Maxsea TZ Professional can display the sonar picture of this equipment and control some basic operation (range, tilt, gain control) of the sonar from the PC. To display the sonar picture in TZ Professional, connect the PC that TZ Professional is installed to the processor unit, via the LAN interface.

Check the following points to sonar data to the TZ Professional:

- The PC that TZ Professional is installed is connected to the LAN1 port of the processor unit.
  Note: Use the switching HUB (HUB-100) to connect between the processor unit and the PC.
- The standby popup appears on the sonar screen of the TZ Professional while the transducer is standby (transducer is retracted).
- The transmission start popup appears on the sonar screen of the TZ Professional while the transducer is transmitting (transducer is projected).
  Note 1: When the [TX] is set to [OFF] in the [Test] menu, the sonar picture is not displayed in the TZ Processional screen even if the transducer is projected.
  Note 2: When the ship is docked, you cannot transmit the transducer. Therefore, perform the dummy test from the [Test] menu and check the dummy test picture is displayed on the sonar screen of the TZ Professional.

For details about TZ Professional, see the operator’s manual of TZ Professional.

APPX. 1 JIS CABLE GUIDE

Cables listed in the manual are usually shown as Japanese Industrial Standard (JIS). Use the following guide to locate an equivalent cable locally.

JIS cable names may have up to 6 alphabetical characters, followed by a dash and a numerical value (example: DPYC-2.5).
For core types D and T, the numerical designation indicates the *cross-sectional Area (mm^2)* of the core wire(s) in the cable.
For core types M and TT, the numerical designation indicates the *number of core wires* in the cable.

1. Core Type

D: Double core power line
T: Triple core power line
M: Multi core
TT: Twisted pair communications (1Q=quad cable)

2. Insulation Type

P: Ethylene Propylene Rubber

3. Sheath Type

Y: PVC (Vinyl)

4. Armor Type

C: Steel

5. Sheath Type

Y: Anticorrosive vinyl sheath

6. Shielding Type

SLA: All cores in one shield, plastic tape w/aluminum tape
-SLA: Individually shielded cores, plastic tape w/aluminum tape


DPYCY


TPYCY

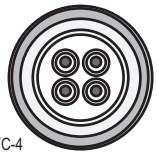
MPYC-4


TTYCSLA-4

EX: TTYCYSLA - 4
(1 = TT, 3 = Y, 4 = C, 5 = Y, 6 = SLA)
Designation type — # of twisted pairs

MPYC - 4
(1 = M, 2 = P, 3 = Y, 4 = C)
Designation type — # of cores

The following reference table lists gives the measurements of JIS cables commonly used with Furuno products:

Type	Core Area	Core Diameter	Cable Diameter	Type	Core Area	Core Diameter	Cable Diameter
DPYC-1.5	1.5mm²	1.56mm	11.7mm	TTYCSLA-1	0.75mm²	1.11mm	9.4mm
DPYC-2.5	2.5mm²	2.01mm	12.8mm	TTYCSLA-1T	0.75mm²	1.11mm	10.1mm
DPYC-4	4.0mm²	2.55mm	13.9mm	TTYCSLA-1Q	0.75mm²	1.11mm	10.8mm
DPYC-6	6.0mm²	3.12mm	15.2mm	TTYCSLA-4	0.75mm²	1.11mm	15.7mm
DPYC-10	10.0mm²	4.05mm	17.1mm	TTYCY-1	0.75mm²	1.11mm	11.0mm
DPYCY-1.5	1.5mm²	1.56mm	13.7mm	TTYCY-1T	0.75mm²	1.11mm	11.7mm
DPYCY-2.5	2.5mm²	2.01mm	14.8mm	TTYCY-1Q	0.75mm²	1.11mm	12.6mm
DPYCY-4	4.0mm²	2.55mm	15.9mm	TTYCY-4	0.75mm²	1.11mm	17.7mm
MPYC-2	1.0mm²	1.29mm	10.0mm	TTYCY-4SLA	0.75mm²	1.11mm	19.5mm
MPYC-4	1.0mm²	1.29mm	11.2mm	TTYCYSLA-1	0.75mm²	1.11mm	11.2mm
MPYC-7	1.0mm²	1.29mm	13.2mm	TTYCYSLA-4	0.75mm²	1.11mm	17.9mm
MPYC-12	1.0mm²	1.29mm	16.8mm	TTPYCSLA-1	0.75mm²	1.11mm	9.2mm
TPYC-1.5	1.5mm²	1.56mm	12.5mm	TTPYCSLA-1T	0.75mm²	1.11mm	9.8mm
TPYC-2.5	2.5mm²	2.01mm	13.5mm	TTPYCSLA-1Q	0.75mm²	1.11mm	10.5mm
TPYC-4	4.0mm²	2.55mm	14.7mm	TTPYCSLA-4	0.75mm²	1.11mm	15.3mm
TPYCY-1.5	1.5mm²	1.56mm	14.5mm				
TPYCY-2.5	2.5mm²	2.01mm	15.5mm				
TPYCY-4	4.0mm²	2.55mm	16.9mm				

APPX. 2 FRP/ALUMINUM RETRACTION TANK INSTALLATION

Keep the following points in mind when installing the FSV-25 inside a FRP/aluminum retraction tank.

- FURUNO does not supply any type of FRP/aluminum retraction tank.
  Keep in mind the structural integrity and waterproofing of the vessel when fabricating a FRP/aluminum tank. FURUNO takes no responsibility for the fabrication or design of the FRP/aluminum tank.
- The tank flange must be as smooth as possible. Peaks and troughs should be 0.5 mm or less.
- The term “liquid gasket” refers to the sealant recommended by the fabricator.
- Use a Joint Sheet equivalent to “Tombo No. 1995 CLINSIL - Brown” as the waterproofing gasket.

Waterproofing gasket dimensions

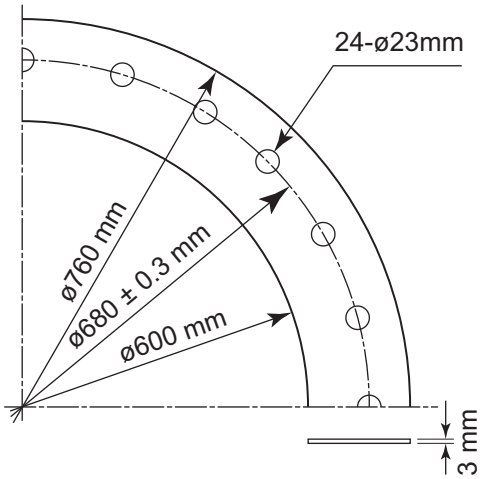

- For FRP retraction tank, use a reinforced FRP retraction tank whose flange is reinforced with steel member.

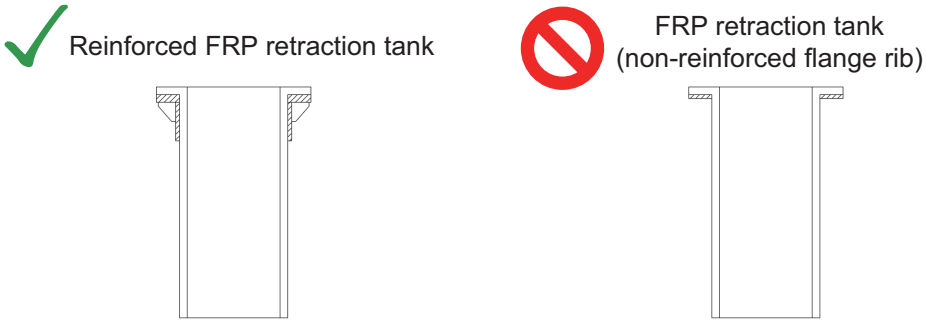

- For aluminum retraction tank, the thickness of the tank must be 20 mm or more. Also, insulate the hull unit and the retraction tank to prevent corrosion of the hull.

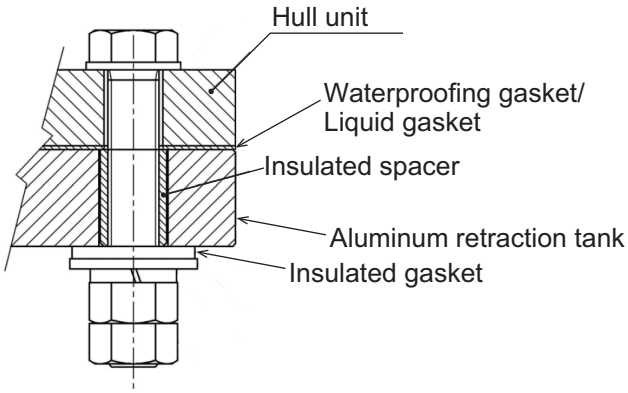

- When you install the hull unit to the existing retraction tank using the attachment flange (see section 1.9), be sure to reinforce the attachment flange using reinforcement ribs. if you cannot weld reinforcement ribs, install stays using the M20 bolt holes for securing the retraction tank and hull unit.

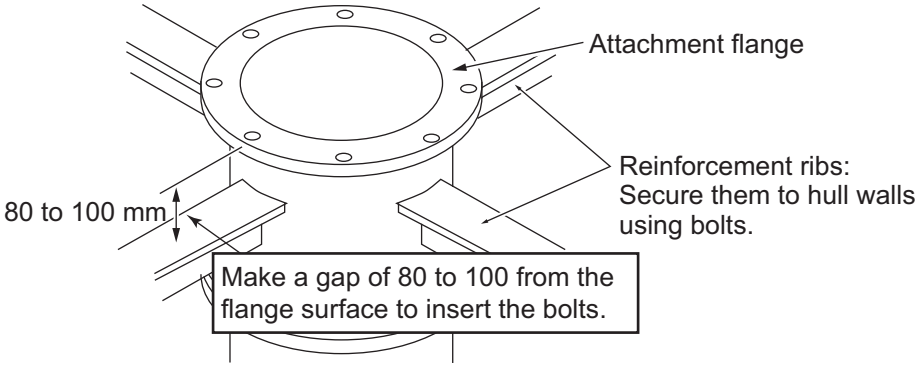

Note: If the reinforcement ribs are welded with the gasket attached, the gasket may be damaged by heat. Therefore, temporarily install the attachment flange without the gasket, then weld the reinforcement ribs. After welding the reinforcement ribs, fully tighten the attachment flange with the gasket attached.

Prepare the following items:

- Spanner - M20 with opposite side of 30 mm.
- Ethyl alcohol - 99.5%.
- Waste cloths - Appropriate amount.
- Lithium grease - Daphne Grease MP No.2 (IDEMITSU KOSAN CO.,LTD) or equivalent.
- Liquid gasket - ThreeBond TB1184 or equivalent.

Installation

1. Clean the retraction tank flange using a cloth and ethyl alcohol. Allow the area to dry before moving to the next step.
2. Apply a coat of liquid gasket to the retraction tank flange. Apply extra liquid gasket to the inner edge of the flange, to prevent water leakage. (See figure to the right.)
3. Place the waterproofing gasket on the liquid gasket, then apply an even coat of liquid gasket over the waterproofing gasket.
4. Clean the hull unit flange, taking care not to drop anything on the retraction tank flange.

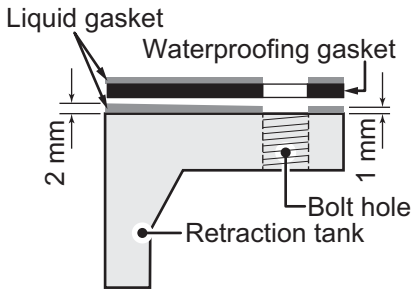

5. Insert the hull unit into the retraction tank and orient the hull unit so that the bow mark (inscribed on the hull unit flange) points toward the ship's bow.
   Also, take note of the waterproofing gasket bolts holes and the flange bolt holes. Make sure all three bolt holes align.
   Note: Heading adjustment is required if the bow mark is not facing the ship's bow. (See "How to Adjust the Heading" on page 3-10.)
6. Apply a slight amount of lithium grease to the threads of the stud bolt on the hull unit, to prevent scorching.
7. Put a flat washer, spring washer and two hex nuts (in that order) on the stud bolt. Fasten the two hex nuts by hand.

8. Insert the bolts with washers from the retraction tank flange, and then put one flat washer, one spring washer and one hex nut on each bolt. Fasten the hex nuts by hand. Leave one bolt hole empty (you should have one bolt, on spring washer, two flat washers and one hex nut remaining).
9. Fasten the hex nuts at all locations (except the empty bolt hole), to secure the flanges in place. Insert the final bolt, using the same order for washers and the nut as described in step 8, then fasten the hex nuts on the final bolt.
10. Check that all bolts are firmly fastened, that the flanges are connected evenly and that no “biting” of the waterproofing gasket has occurred. Re-fasten as required.

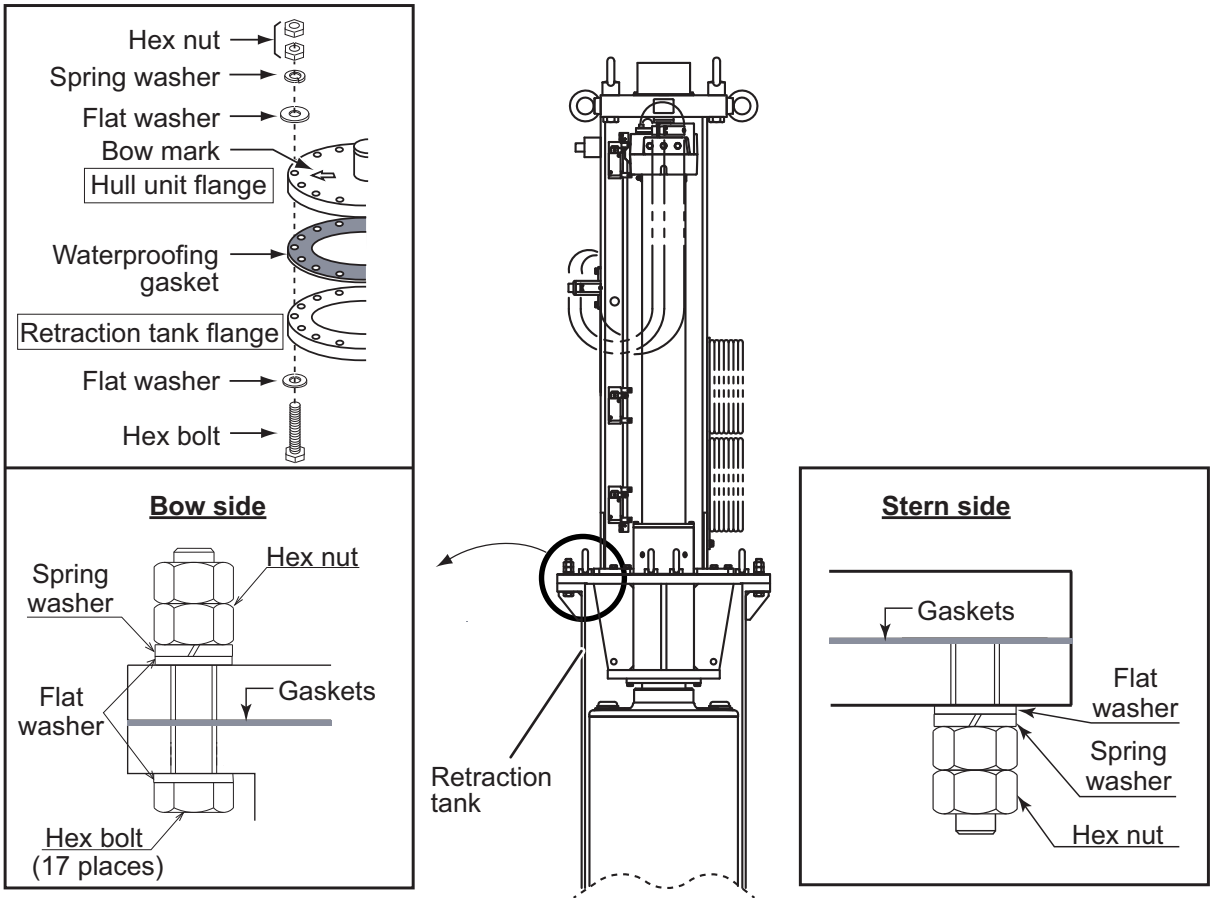

Fastening torque for all flange hex nuts: 230 N•m

APPX. 3 INSTALLATION CHECK LIST

After completing the installation, perform the following checks:

Check point		Reference	Result
Hardware installation check			
O-ring in the retraction tank flange	O-ring is attached to the retraction tank flange.	section 1.1.3	☐
O-ring in the attachment flange (when the attachment flange is used)	O-ring is attached to the attachment flange.	section 1.9	☐
Insulated gasket in the bolt holes on the attachment flange (when OP10-24 is used)	Insulated gaskets are inserted to the bolt holes on the attachment flange.	section 1.9	☐
Bow mark direction of the transducer	Confirm that the bow mark on the transducer faces the bow direction.	section 1.1.3	☐
Breaker settings on the power supply unit	Breaker lever on the power supply unit are changed correctly, depending on the input voltage.	section 2.7	☐
Vibration and sound while raising/lowering the transducer	Confirm that abnormal vibration or noise is not generated from the hull unit while raising/lowering the transducer.	-	☐
Software setting check			
Language setting	The language in which the menus and indications is changed as necessary.	section 3.2	☐
Transducer position registration	The transducer position registration is completed.	section 3.3	☐
Turn the transmission on	Change the transmission status from [OFF] to [ON].	section 3.4	☐
Heading Correction	Adjust the heading so an echo which is dead ahead appears dead ahead on the display.	section 3.5	☐
Direction offset of the motion sensor	Offset the direction difference between the [Reference Direction] mark on the motion sensor and bow direction.	section 3.5	☐
Stroke setting	Select 1200 mm or 1600 mm according to the stroke (length) of your hull unit.	section 3.9.4	☐
External data setting	Set the baud rate for the NMEA2000 port and select the input format for external data.	section 3.9.2/ section 3.9.3	☐
System time setting	Set the system time and time zone.	Operator's manual	☐
Save ship's original setting	Save all menu settings in the internal memory as necessary.	Operator's manual	☐
Display setting for the numeric/graphic data display	Change the display setting for the numeric/graphic data display as appropriate.	Operator's manual	☐
Continued of following page			

Check point		Reference	Result
Function key setting	Assign the function to the function keys as necessary.	Operator's manual	☐
Preset the horizontal mode ranges	Preset the horizontal mode ranges as selected with the **RANGE** control as necessary.	Operator's manual	☐

PACKING LIST

10CV-X-9866 -0 1/1

FSV-8501-MK2

A-1

NAME	OUTLINE	DESCRIPTION/CODE No.	Q'TY
ユニット UNIT			
操作部 CONTROL UNIT	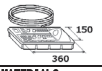	FSV-8501-MK2-* 000-038-291-00 **	1
工事材料 INSTALLATION MATERIALS			
KB取付金具 KB FIXTURE ASSEMBLY		CP03-33202 001-115-510-00	1
工事材料 INSTALLATION MATERIALS		CP10-09601 001-537-900-00	1

ｺｰﾄﾞ番号末尾の[**]は、選択品の代表ｺｰﾄﾞを表します。
CODE NUMBER ENDING WITH "**" INDICATES THE CODE NUMBER OF REPRESENTATIVE MATERIAL.

(略図の寸法は、参考値です。 DIMENSIONS IN DRAWING FOR REFERENCE ONLY.)

C1367-Z01-A

PACKING LIST

10DG-X-9851 -1 1/1

FSV-2503-MK2-*, FSV-2503S-MK2-*

A-2

NAME	OUTLINE	DESCRIPTION/CODE No.	Q'TY
ユニット UNIT			
制御部 PROCESSOR UNIT	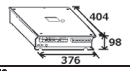	FSV-2503/2503S-MK2-* 000-038-535-00 **	1
予備品 SPARE PARTS			
予備品 SPARE PARTS		SP26-00301 001-080-860-00	1
工事材料 INSTALLATION MATERIALS			
ｹｰﾌﾞﾙ組品MJ CABLE ASSY.		MJ-A3SPF0018-050ZC 001-597-190-00	1
工事材料 INSTALLATION MATERIALS		CP10-09701 001-538-140-00	1
図書 DOCUMENT			
ﾋｭｰｽﾞ交換要領 FUSE REPLACEMENT GUIDE	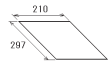	C12-01903-* 000-197-190-1*	1
取扱説明書 OPERATOR'S MANUAL	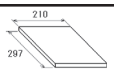	OM*-13690-* 000-199-242-1* **	1 (*1)
取扱説明書(和) OPERATOR'S MANUAL(JP)	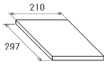	OMJ-13710-* 000-199-241-1*	1 (*1)
装備要領書 INSTALLATION MANUAL	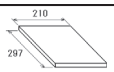	IM*-13690-* 000-199-245-1* **	1 (*1)
装備要領書(和) INSTALLATION MANUAL(JP)	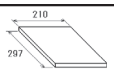	IMJ-13710-* 000-199-244-1*	1 (*1)

1.ｺｰﾄﾞ番号末尾の[**]は、選択品の代表ｺｰﾄﾞを表します。
1.CODE NUMBER ENDING WITH "**" INDICATES THE CODE NUMBER OF REPRESENTATIVE MATERIAL.
2.(*1)は、それぞれ仕様選択品を表します。
2.(*1)INDICATE SPECIFICATION SELECTIVE ITEM.

(略図の寸法は、参考値です。 DIMENSIONS IN DRAWING FOR REFERENCE ONLY.)

C1369-Z01-B

PACKING LIST

10DG-X-9853 -1 1/1

FSV-251-MK2

A-3

NAME	OUTLINE	DESCRIPTION/CODE No.	Q'TY
ユニット UNIT			
送受信装置 TRANSCEIVER UNIT		FSV-251-MK2 000-038-542-00	1
予備品 SPARE PARTS			
予備品 SPARE PARTS		SP10-03901 001-268-990-00	1
工事材料 INSTALLATION MATERIALS			
ﾜｲﾔｰﾛｰﾌﾟ防振器 WIRE ROPE ANTI-VIBRATION	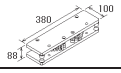	CP10-09302 001-349-800-00	2
工事材料 INSTALLATION MATERIALS		CP10-09301 001-349-780-00	1
防振ｶﾊﾞｰ VIBRATION ISOLATION COVER		CP10-09303 001-349-820-00	2
図書 DOCUMENT			
DIPSW設定要領 DIP SWITCH SETTING GUIDE	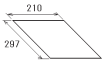	C12-02102-* 000-199-325-1*	1

(略図の寸法は、参考値です。 DIMENSIONS IN DRAWING FOR REFERENCE ONLY.)

C1369-Z02-B

PACKING LIST

10CX-X-9856 -1 1/1

FSV-252

A-4

NAME	OUTLINE	DESCRIPTION/CODE No.	Q'TY
ユニット UNIT			
電源装置 POWER UNIT		FSV-252 000-025-239-00	1
工事材料 INSTALLATION MATERIALS			
ｱｰｽ板 COPPER STRAP	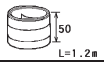	WEA-1004-0 ROHS 500-310-040-10	1
圧着端子 CRIMP-ON LUG		FV2-4 BLU K 000-157-247-11	2
圧着端子 CRIMP-ON LUG		FV2-5 BLU K 000-157-248-11	2
図書 DOCUMENT			
電源設定書 POWER SETTING INSTRUCTIONS	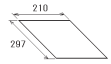	C12-01304-* 000-178-996-1*	1

(略図の寸法は、参考値です。 DIMENSIONS IN DRAWING FOR REFERENCE ONLY.)

C1344-Z04-B

PACKING LIST

10CX-X-9938 -0 1/1

FSV-252A

A-5

NAME	OUTLINE	DESCRIPTION/CODE No.	Q'TY
ユニット UNIT			
電源装置 POWER SUPPLY UNIT		FSV-252A 000-042-706-00	1
工事材料 INSTALLATION MATERIALS			
工事材料 INSTALLATION MATERIALS		CP10-10601 001-636-160-00	1
図書 DOCUMENT			
装備ｶﾞｲﾄﾞ INSTALLATION GUIDE	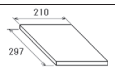	C12-02202-＊ 000-199-792-1＊	1

（略図の寸法は、参考値です。 DIMENSIONS IN DRAWING FOR REFERENCE ONLY.）

C1344-Z38-A

PACKING LIST

10DG-X-9860 -0 1/1

FSV-2550-MK2-＊

A-6

NAME	OUTLINE	DESCRIPTION/CODE No.	Q'TY
ユニット UNIT			
接続箱 JUNCTION BOX		FSV-2550-MK2 000-038-547-00	1
工事材料 INSTALLATION MATERIALS			
ｹｰﾌﾞﾙ(組品) CABLE ASSEMBLY		S10-20-10 001-324-780-00	1 (＊1)
ｹｰﾌﾞﾙ(組品) CABLE ASSEMBLY		S10-20-20 001-324-790-00	1 (＊1)
ｹｰﾌﾞﾙ(組品) CABLE ASSEMBLY		S10-20-5 001-406-780-00	1 (＊1)
工事材料 INSTALLATION MATERIALS		CP10-07801 001-268-610-00	1
接続箱取付板 FIXING PLATE OF JUNCTIONBOX	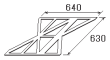	10-089-5583-0 100-387-080-10	1

(＊1)は、それぞれ仕様選択品を表します。
(＊1)INDICATE SPECIFICATION SELECTIVE ITEM.

（略図の寸法は、参考値です。 DIMENSIONS IN DRAWING FOR REFERENCE ONLY.）

C1369-Z08-A

PACKING LIST

10DG-X-9855 -1 1/1

FSV-253-MK2-T/T-R

A-7

NAME	OUTLINE	DESCRIPTION/CODE No.	Q'TY
ユニット UNIT			
上下装置 HULL UNIT	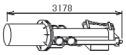	FSV-253-MK2-T-＊ 000-038-556-00 **	1
予備品 SPARE PARTS			
予備品 SPARE PARTS		SP10-04201 001-269-280-00	1
その他部品 OTHER PARTS			
較正ﾃﾞｰﾀCD箱詰 CD-R WITH CALIBRATED DATA(IN BOX)		FSV-2570/2571-R 001-437-000-00	1 (＊1)
工事材料 INSTALLATION MATERIALS			
工事材料箱詰 INSTALLATION MATERIALS(IN BOX)		CP10-08300 000-025-069-00	1
図書 DOCUMENT			
装備要領書(英) INSTALLATION MANUAL(EN)	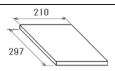	IME-13690-＊ 000-199-245-1＊	1
装備要領書(和) INSTALLATION MANUAL(JP)	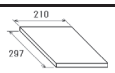	IMJ-13690-＊ 000-199-243-1＊	1

1.ｺｰﾄﾞ番号末尾の[**]は、選択品の代表ｺｰﾄﾞを表します。
1.CODE NUMBER ENDING WITH "**" INDICATES THE CODE NUMBER OF REPRESENTATIVE MATERIAL.
2.(＊1)の部品は、FSV-253-MK2-T-R用です。
2.(＊1) MARKED PARTS ARE FOR FSV-253-MK2-T-R.

（略図の寸法は、参考値です。 DIMENSIONS IN DRAWING FOR REFERENCE ONLY.）

C1369-Z03-B

PACKING LIST

10DG-X-9857 -1 1/1

FSV-253-MK2-N/N-R

A-8

NAME	OUTLINE	DESCRIPTION/CODE No.	Q'TY
ユニット UNIT			
上下装置 HULL UNIT	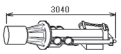	FSV-253-MK2-N-＊ 000-038-557-00 **	1
予備品 SPARE PARTS			
予備品 SPARE PARTS		SP10-04201 001-269-280-00	1
その他部品 OTHER PARTS			
較正ﾃﾞｰﾀCD箱詰 CD-R WITH CALIBRATED DATA(IN BOX)		FSV-2570/2571-R 001-437-000-00	1 (＊1)
工事材料 INSTALLATION MATERIALS			
工事材料箱詰 INSTALLATION MATERIALS(IN BOX)		CP10-08300 000-025-069-00	1
図書 DOCUMENT			
装備要領書(英) INSTALLATION MANUAL(EN)	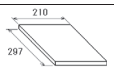	IME-13690-＊ 000-199-245-1＊	1
装備要領書(和) INSTALLATION MANUAL(JP)	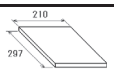	IMJ-13690-＊ 000-199-243-1＊	1

1.ｺｰﾄﾞ番号末尾の[**]は、選択品の代表ｺｰﾄﾞを表します。
1.CODE NUMBER ENDING WITH "**" INDICATES THE CODE NUMBER OF REPRESENTATIVE MATERIAL.
2.(＊1)の部品は、FSV-253-MK2-N-R用です。
2.(＊1) MARKED PARTS ARE FOR FSV-253-MK2-N-R.
（略図の寸法は、参考値です。 DIMENSIONS IN DRAWING FOR REFERENCE ONLY.）

C1369-Z05-B

PACKING LIST

10DG-X-9856 -1 1/1

FSV-254-MK2-T/T-R

A-9

NAME	OUTLINE	DESCRIPTION/CODE No.	Q'TY
ユニット UNIT			
上下装置 HULL UNIT	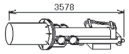	FSV-254-MK2-T-* 000-038-558-00 **	1
予備品 SPARE PARTS			
予備品 SPARE PARTS		SP10-04201 001-269-280-00	1
その他部品 OTHER PARTS			
較正ﾃﾞｰﾀCD箱詰 CD-R WITH CALIBRATED DATA(IN BOX)		FSV-2570/2571-R 001-437-000-00	1 (*1)
工事材料 INSTALLATION MATERIALS			
工事材料箱詰 INSTALLATION MATERIALS(IN BOX)		CP10-08300 000-025-069-00	1
図書 DOCUMENT			
装備要領書(英) INSTALLATION MANUAL(EN)	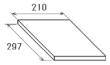	IME-13690-* 000-199-245-1*	1
装備要領書(和) INSTALLATION MANUAL(JP)	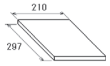	IMJ-13690-* 000-199-243-1*	1

1.ｺｰﾄﾞ番号末尾の[**]は、選択品の代表ｺｰﾄﾞを表します。
1.CODE NUMBER ENDING WITH "**" INDICATES THE CODE NUMBER OF REPRESENTATIVE MATERIAL.
2.(*1)の部品は、FSV-254-MK2-T-R用です。
2.(*1) MARKED PARTS ARE FOR FSV-254-MK2-T-R.

(略図の寸法は、参考値です。 DIMENSIONS IN DRAWING FOR REFERENCE ONLY.)

C1369-Z04-B

PACKING LIST

10DG-X-9859 -1 1/1

FSV-254-MK2-N/N-R

A-10

NAME	OUTLINE	DESCRIPTION/CODE No.	Q'TY
ユニット UNIT			
上下装置 HULL UNIT	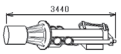	FSV-254-MK2-N-* 000-038-559-00 **	1
予備品 SPARE PARTS			
予備品 SPARE PARTS		SP10-04201 001-269-280-00	1
その他部品 OTHER PARTS			
較正ﾃﾞｰﾀCD箱詰 CD-R WITH CALIBRATED DATA(IN BOX)		FSV-2570/2571-R 001-437-000-00	1 (*1)
工事材料 INSTALLATION MATERIALS			
工事材料箱詰 INSTALLATION MATERIALS(IN BOX)		CP10-08300 000-025-069-00	1
図書 DOCUMENT			
装備要領書(英) INSTALLATION MANUAL(EN)	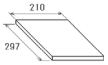	IME-13690-* 000-199-245-1*	1
装備要領書(和) INSTALLATION MANUAL(JP)	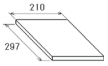	IMJ-13690-* 000-199-243-1*	1

1.ｺｰﾄﾞ番号末尾の[**]は、選択品の代表ｺｰﾄﾞを表します。
1.CODE NUMBER ENDING WITH "**" INDICATES THE CODE NUMBER OF REPRESENTATIVE MATERIAL.
2.(*1)の部品は、FSV-254-MK2-N-R用です。
2.(*1) MARKED PARTS ARE FOR FSV-254-MK2-N-R.

(略図の寸法は、参考値です。 DIMENSIONS IN DRAWING FOR REFERENCE ONLY.)

C1369-Z07-B

PACKING LIST

10CV-X-9872 -0 1/1

FSV-854-MK2-E-*

A-11

NAME	OUTLINE	DESCRIPTION/CODE No.	Q'TY
ユニット UNIT			
ﾘﾓｺﾝ REMOTE CONTROLLER	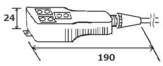	FSV-854-MK2-E-* 000-038-341-00 **	1
工事材料 INSTALLATION MATERIALS			
工事材料 INSTALLATION MATERIALS		CP10-04200 006-027-250-00	1

ｺｰﾄﾞ番号末尾の[**]は、選択品の代表ｺｰﾄﾞを表します。
CODE NUMBER ENDING WITH "**" INDICATES THE CODE NUMBER OF REPRESENTATIVE MATERIAL.

(略図の寸法は、参考値です。 DIMENSIONS IN DRAWING FOR REFERENCE ONLY.)

C1367-Z07-A

PACKING LIST

10CV-X-9856 -0 1/1

FSV-853

A-12

NAME	OUTLINE	DESCRIPTION/CODE No.	Q'TY
ユニット UNIT			
簡易操作部 CONTROL UNIT	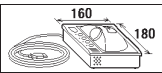	FSV-853 000-019-213-00	1
工事材料 INSTALLATION MATERIALS			
工事材料 INSTALLATION MATERIALS		CP10-07501 001-135-210-00	1

型式/ｺｰﾄﾞ番号が2段の場合、下段より上段に代わる過渡期品であり、どちらかが入っています。 なお、品質は変わりません。

TWO TYPES AND CODES MAY BE LISTED FOR AN ITEM. THE LOWER PRODUCT MAY BE SHIPPED IN PLACE OF THE UPPER PRODUCT. QUALITY IS THE SAME.

(略図の寸法は、参考値です。 DIMENSIONS IN DRAWING FOR REFERENCE ONLY.)

C1335-Z06-A

PACKING LIST

10CX-X-9891 -2 1/1

FSV-2560

A-13

NAME	OUTLINE	DESCRIPTION/CODE No.	Q'TY
ユニット UNIT			
制御器延長箱 CONTROL BOX EXTENSION BOX	346 332 172	FSV-2560 000-025-106-00	1
工事材料 INSTALLATION MATERIALS		CP10-08000	
ｹｰﾌﾞﾙ(組品) CABLE ASSEMBLY	L=5M	10CA10027 000-178-749-11	1
ｹｰﾌﾞﾙ(組品) CABLE ASSEMBLY	L=5M	10CA10028 000-178-750-11	1
ｹｰﾌﾞﾙ(組品) CABLE ASSEMBLY	L=5M	10CA10029 000-178-751-11	1
工事材料 INSTALLATION MATERIALS		CP10-08001 001-269-660-00	1

(略図の寸法は、参考値です。 DIMENSIONS IN DRAWING FOR REFERENCE ONLY.)

C1344-Z19-C

A-14

FURUNO

CODE NO.	001-115-510-00	03HE-X-9407 -0
TYPE	CP03-33202	1/1

工事材料表

INSTALLATION MATERIALS

RCU-021,FSV-8501

番号 NO.	名称 NAME	略図 OUTLINE	型名／規格 DESCRIPTIONS	数量 Q'TY	用途／備考 REMARKS
1	KB取付金具 KB FIXTURE	344 151 51	03-177-2201-0 CODE NO. 100-358-860-10	1	

型式/ｺｰﾄﾞ番号が２段の場合、下段より上段に代わる過渡期品であり、どちらかが入っています。 なお、品質は変わりません。

TWO TYPES AND CODES MAY BE LISTED FOR AN ITEM. THE LOWER PRODUCT MAY BE SHIPPED IN PLACE OF THE UPPER PRODUCT. QUALITY IS THE SAME.

(略図の寸法は、参考値です。 DIMENSIONS IN DRAWING FOR REFERENCE ONLY.)

FURUNO ELECTRIC CO., LTD.

C3584-M07-A

A-15

FURUNO

CODE NO.	001-537-900-00	10DA-X-9401 -0
TYPE	CP10-09601	1/1

工事材料表

INSTALLATION MATERIALS

番号 NO.	名称 NAME	略図 OUTLINE	型名／規格 DESCRIPTIONS	数量 Q'TY	用途／備考 REMARKS
1	ｷｼﾞｷｬｯﾌﾟ CAP	5 φ13	03-177-2204-0 CODE NO. 100-358-860-10	4	
2	+ﾊﾟｲﾝﾄﾞﾀｯﾋﾟﾝﾆｼｭ TAPPING SCREW	20 5	5X20 SUS304 CODE NO. 000-171-997-10	4	
3	冷間圧造蝶ﾅｯﾄ WING NUT	22 10.5	M4 SUS304 CODE NO. 000-167-545-10	4	
4	寸切ﾎﾞﾙﾄ THREADED ROD	50 φ4	M4X50 SUS304 CODE NO. 000-162-879-10	4	
5	+ﾊﾞｲﾝﾄﾞｺｷｼﾞ BINDING HEAD SCREW	12 φ5	M5X12 SUS304 CODE NO. 000-171-999-10	4	

(略図の寸法は、参考値です。 DIMENSIONS IN DRAWING FOR REFERENCE ONLY.)

FURUNO ELECTRIC CO., LTD.

C1363-M13-A

A-16

FURUNO

CODE NO.	001-538-140-00	10DA-X-9402 -0
TYPE	CP10-09701	1/1

工事材料表

INSTALLATION MATERIALS

番号 NO.	名称 NAME	略図 OUTLINE	型名／規格 DESCRIPTIONS	数量 Q'TY	用途／備考 REMARKS
1	ｺﾝﾍﾞｯｸｽ CABLE TIE	150	CV-150N CODE NO. 000-162-186-10	8	
2	六角ｽﾘｯﾄﾂﾙ ｾﾑｽB HEX. HEAD SLOT BOLT-B WASHER	20 φ6	M6X20 SUS304 CODE NO. 000-162-948-10	4	

(略図の寸法は、参考値です。 DIMENSIONS IN DRAWING FOR REFERENCE ONLY.)

FURUNO ELECTRIC CO., LTD.

C1363-M01-A

A-17

FURUNO

CODE NO.	001-349-780-00	10CX-X-9420 -1
TYPE	CP10-09301	1/1

工事材料表

INSTALLATION MATERIALS

番号 NO.	名称 NAME	略図 OUTLINE	型名／規格 DESCRIPTIONS	数量 Q'TY	用途／備考 REMARKS
1	圧着端子 CRIMP-ON LUG	21, 9	FV2-4 BLU K CODE NO. 000-157-247-11	3	
2	六角ﾅｯﾄ 1ｼｭ HEXAGONAL NUT	10, 19	M12 SUS304 CODE NO. 000-167-491-10	8	
3	ﾐｶﾞｷﾏﾙ平座金 FLAT WASHER	φ24	M12 SUS304 CODE NO. 000-167-446-10	8	
4	ﾊﾞﾈ座金 SPRING WASHER	22	M12 SUS304 CODE NO. 000-167-397-10	8	
5	六角ﾎﾞﾙﾄ HEXAGONAL HEAD BOLT	50, φ12	M12X50 SUS304 CODE NO. 000-164-116-10	4	
6	ﾅﾍﾞｲﾝﾄﾞｺｷｼﾞ BINDING HEAD SCREW	8, φ4	M4X8 SUS304 CODE NO. 000-176-672-10	6	
7	ｱｰｽ板 COPPER STRAP	50, L=1.2m	WEA-1004-0 ROHS CODE NO. 500-310-040-10	1	

（略図の寸法は、参考値です。 DIMENSIONS IN DRAWING FOR REFERENCE ONLY.）

FURUNO ELECTRIC CO., LTD.

C1344-M13-B

A-18

FURUNO

CODE NO.	001-349-820-00	10CX-X-9421 -0
TYPE	CP10-09303	1/1

工事材料表

INSTALLATION MATERIALS

番号 NO.	名称 NAME	略図 OUTLINE	型名／規格 DESCRIPTIONS	数量 Q'TY	用途／備考 REMARKS
1	防振ｶﾊﾞｰ(I改) VIB.ISO.COVER (1) REVI.ED.	142, 73, 408	10-089-6724-0 CODE NO. 100-398-180-10	1	

型式/ｺｰﾄﾞ番号が２段の場合、下段より上段に代わる過渡期品であり、どちらかが入っています。 なお、品質は変わりません。

TWO TYPES AND CODES MAY BE LISTED FOR AN ITEM. THE LOWER PRODUCT MAY BE SHIPPED IN PLACE OF THE UPPER PRODUCT. QUALITY IS THE SAME.

（略図の寸法は、参考値です。 DIMENSIONS IN DRAWING FOR REFERENCE ONLY.）

FURUNO ELECTRIC CO., LTD.

C1344-M14-A

A-19

FURUNO

CODE NO.	001-268-610-00	10CX-X-9402 -0
TYPE	CP10-07801	1/1

工事材料表

INSTALLATION MATERIALS

番号 NO.	名称 NAME	略図 OUTLINE	型名／規格 DESCRIPTIONS	数量 Q'TY	用途／備考 REMARKS
1	ｺﾝﾍﾞｯｸｽ CABLE TIE	550	CV-550B CODE NO. 000-162-166-10	10	
2	ﾛｯｶｸｾﾑﾜB HEX.WASHER HEAD BOLT-B	25, φ10	M10X25 SUS304 CODE NO. 000-179-083-10	6	
3	ﾛｯｶｸｾﾑﾜB HEX.WASHER HEAD BOLT-B	35, φ12	M12X35 SUS304 CODE NO. 000-179-084-10	6	

型式/ｺｰﾄﾞ番号が２段の場合、下段より上段に代わる過渡期品であり、どちらかが入っています。 なお、品質は変わりません。

TWO TYPES AND CODES MAY BE LISTED FOR AN ITEM. THE LOWER PRODUCT MAY BE SHIPPED IN PLACE OF THE UPPER PRODUCT. QUALITY IS THE SAME.

（略図の寸法は、参考値です。 DIMENSIONS IN DRAWING FOR REFERENCE ONLY.）

FURUNO ELECTRIC CO., LTD.

C1344-M02-A

A-20

FURUNO

CODE NO.	000-025-069-00	10CX-X-9403 -1
TYPE	CP10-08300	1/1

工事材料表

INSTALLATION MATERIALS

FSV-253/254

番号 NO.	名称 NAME	略図 OUTLINE	型名／規格 DESCRIPTIONS	数量 Q'TY	用途／備考 REMARKS
1	ﾌﾞﾗｲﾝﾄﾞｼｰﾙN2.5 BLIND SEAL N2.5	φ9.5	05-104-6519-0 CODE NO. 100-372-550-10	1	
2	Oﾘﾝｸﾞ(V) O-RING	φ579	CO 0318A(V585) CODE NO. 000-166-370-10	1	
3	圧着端子 CRIMP-ON LUG	26, 10	FV5.5-4(LF) YEL K CODE NO. 000-166-744-11	3	
4	六角ﾅｯﾄ 1ｼｭ HEX.NUT	16, 30	M20 SUS304 CODE NO. 000-167-476-10	48	
5	ﾐｶﾞｷ丸平座金 FLAT WASHER	φ40	M20 SUS304 CODE NO. 000-167-452-10	41	
6	ﾊﾞﾈ座金 SPRING WASHER	34	M20 SUS304 CODE NO. 000-167-401-10	24	
7	六角ﾎﾞﾙﾄ 全ﾈｼﾞ HEXAGONAL HEAD SCREW	120, φ20	M20X120 SUS304 CODE NO. 000-162-825-10	17	
8	ｱｰｽ板 COPPER STRAP	50, L=1.2m	WEA-1004-0 ROHS CODE NO. 500-310-040-10	1	

（略図の寸法は、参考値です。 DIMENSIONS IN DRAWING FOR REFERENCE ONLY.）

FURUNO ELECTRIC CO., LTD.

C1344-M03-B

FURUNO

CODE NO.	006-027-250-00	10CH-X-9405 -3
TYPE	CP10-04200	1/1

工事材料表

INSTALLATION MATERIALS

CSH-7040/CH-256

番号 NO.	名称 NAME	略図 OUTLINE	型名／規格 DESCRIPTIONS	数量 Q'TY	用途／備考 REMARKS
1	TF型玉付きﾌｯｸ HOOK	35 20	TF-20 TF-20 CODE NO. 000-167-860-10 000-805-659-00	1	

型式/ｺｰﾄﾞ番号が２段の場合、下段より上段に代わる過渡期品であり、どちらかが入っています。　なお、品質は変わりません。

TWO TYPES AND CODES MAY BE LISTED FOR AN ITEM. THE LOWER PRODUCT MAY BE SHIPPED IN PLACE OF THE UPPER PRODUCT. QUALITY IS THE SAME.

（略図の寸法は、参考値です。　DIMENSIONS IN DRAWING FOR REFERENCE ONLY.）

FURUNO ELECTRIC CO ., LTD.

C1302-M04-D

FURUNO

CODE NO.	001-135-210-00	10CV-X-9405 -0
TYPE	CP10-07501	1/1

工事材料表

INSTALLATION MATERIALS

FSV-853

番号 NO.	名称 NAME	略図 OUTLINE	型名／規格 DESCRIPTIONS	数量 Q'TY	用途／備考 REMARKS
1	KB直付金具(T) KEYBOARD FIXTURE	142	03-163-7821-1 ROHS CODE NO. 100-306-291-10	1	
2	+ｰﾅﾍﾞｾﾑｽB WASHER HEAD SCREW *B*	12 φ4	M4X12 C2700W MBNI2 CODE NO. 000-163-192-10	6	
3	ｸﾘｱﾊﾞﾝﾎﾞﾝ RUBBER FOOT	φ8	TM-180-302 CODE NO. 000-166-468-10	2	

型式/ｺｰﾄﾞ番号が２段の場合、下段より上段に代わる過渡期品であり、どちらかが入っています。　なお、品質は変わりません。

TWO TYPES AND CODES MAY BE LISTED FOR AN ITEM. THE LOWER PRODUCT MAY BE SHIPPED IN PLACE OF THE UPPER PRODUCT. QUALITY IS THE SAME.

（略図の寸法は、参考値です。　DIMENSIONS IN DRAWING FOR REFERENCE ONLY.）

FURUNO ELECTRIC CO ., LTD.

C1335-M05-A

FURUNO

CODE NO.	001-269-660-00	10CX-X-9406 -2
TYPE	CP10-08001	1/1

工事材料表

INSTALLATION MATERIALS

番号 NO.	名称 NAME	略図 OUTLINE	型名／規格 DESCRIPTIONS	数量 Q'TY	用途／備考 REMARKS
1	導電性布ﾃｰﾌﾟ CONDUCTIVE TAPE	L=250 19	DK020FR-19　*0.25M* CODE NO. 000-177-288-10	1	
2	圧着端子 CRIMP-ON LUG	17 5	FV0.5-3 (LF) K CODE NO. 000-166-729-11	8	
3	圧着端子 CRIMP-ON LUG	16 6	FV1.25-3(LF) RED K CODE NO. 000-166-756-11	18	
4	ﾐｶﾞｷ平座金 FLAT WASHER	φ21	M10 SUS304 CODE NO. 000-167-232-10	2	
5	六角ﾅｯﾄ　1ｼｭ HEX.NUT	8 17	M10 SUS304 CODE NO. 000-166-475-10	2	
6	ﾊﾞﾈ座金 SPRING WASHER	18	M10 SUS304 CODE NO. 000-167-233-10	2	
7	ﾛｯｸｶｾﾑｽB HEX.WASHER HEAD BOLT-B	20 φ10	M10X20 SUS304 CODE NO. 000-179-081-10	2	

（略図の寸法は、参考値です。　DIMENSIONS IN DRAWING FOR REFERENCE ONLY.）

FURUNO ELECTRIC CO ., LTD.

C1344-M04-C

FURUNO

CODE NO.	001-636-160-00	10CX-X-9422 -0
TYPE	CP10-10601	1/1

工事材料表

INSTALLATION MATERIALS

FSV-252A

番号 NO.	名称 NAME	略図 OUTLINE	型名／規格 DESCRIPTIONS	数量 Q'TY	用途／備考 REMARKS
1	圧着端子 CRIMP-ON LUG	21 9	FV2-4 BLU K CODE NO. 000-157-247-11	4	
2	圧着端子 CRIMP-ON LUG	21 10	FV2-5 BLU K CODE NO. 000-157-248-11	2	
3	ｱｰｽ板 COPPER STRAP	50 L=1.2m	WEA-1004-0 ROHS CODE NO. 500-310-040-10	1	

（略図の寸法は、参考値です。　DIMENSIONS IN DRAWING FOR REFERENCE ONLY.）

FURUNO ELECTRIC CO ., LTD.

C1344-M15-A

FURUNO

CODE NO.	001-080-860-00	26AE-X-9301-1 1/1
TYPE	SP26-00301	BOX NO. P

SHIP NO.	SPARE PARTS LIST FOR	U S E	SETS PER VESSEL

ITEM NO.	NAME OF PART	OUTLINE	DWG. NO. OR TYPE NO.	QUANTITY WORKING PER SET	QUANTITY WORKING PER VES	QUANTITY SPARE	REMARKS/CODE NO.
1	ﾋｭｰｽﾞ GLASS TUBE FUSE	30 φ6	FGBO-A 125V 15A PBF	1	1	3	000-155-827-10
2	ﾋｭｰｽﾞ GLASS TUBE FUSE	30 φ6	FGBO-A 125V 7A PBF	0	0	3	000-164-965-10

MFR'S NAME	FURUNO ELECTRIC CO.,LTD.	DWG NO.	C4457-P01-B	1/1

(略図の寸法は、参考値です。 DIMENSIONS IN DRAWING FOR REFERENCE ONLY.)

FURUNO

CODE NO.	001-268-990-00	10CX-X-9301-2 1/1
TYPE	SP10-03901	BOX NO. P

SHIP NO.	SPARE PARTS LIST FOR	U S E	SETS PER VESSEL

ITEM NO.	NAME OF PART	OUTLINE	DWG. NO. OR TYPE NO.	QUANTITY WORKING PER SET	QUANTITY WORKING PER VES	QUANTITY SPARE	REMARKS/CODE NO.
1	ﾋｭｰｽﾞ CERAMIC TUBE FUSE	20 φ5	D5Z-8A:CULM	1	1	1	000-178-350-11
2	ﾋｭｰｽﾞ GLASS TUBE FUSE	20 φ5	FGMB-A 250V 3A PBF	2	2	2	000-157-568-10
3	ﾋｭｰｽﾞ GLASS TUBE FUSE	20 φ5	FGMB-S 250V 10A PBF	2	2	2	000-157-495-10

MFR'S NAME	FURUNO ELECTRIC CO.,LTD.	DWG NO.	C1344-P01-C	1/1

(略図の寸法は、参考値です。 DIMENSIONS IN DRAWING FOR REFERENCE ONLY.)

FURUNO

CODE NO.	001-269-280-00	10CX-X-9303-1 1/1
TYPE	SP10-04201	BOX NO. P

SHIP NO.	SPARE PARTS LIST FOR	U S E	SETS PER VESSEL

ITEM NO.	NAME OF PART	OUTLINE	DWG. NO. OR TYPE NO.	QUANTITY WORKING PER SET	QUANTITY WORKING PER VES	QUANTITY SPARE	REMARKS/CODE NO.
1	ﾋｭｰｽﾞ FUSE GLASS TUBE TYPE	20 φ5	FGMB-A 250V 1A PBF	2	2	2	000-157-496-10
2	ﾋｭｰｽﾞ GLASS TUBE FUSE	20 φ5	FGMB-A 250V 2A PBF	3	3	3	000-157-497-10

MFR'S NAME	FURUNO ELECTRIC CO.,LTD.	DWG NO.	C1344-P02-B	1/1

(略図の寸法は、参考値です。 DIMENSIONS IN DRAWING FOR REFERENCE ONLY.)

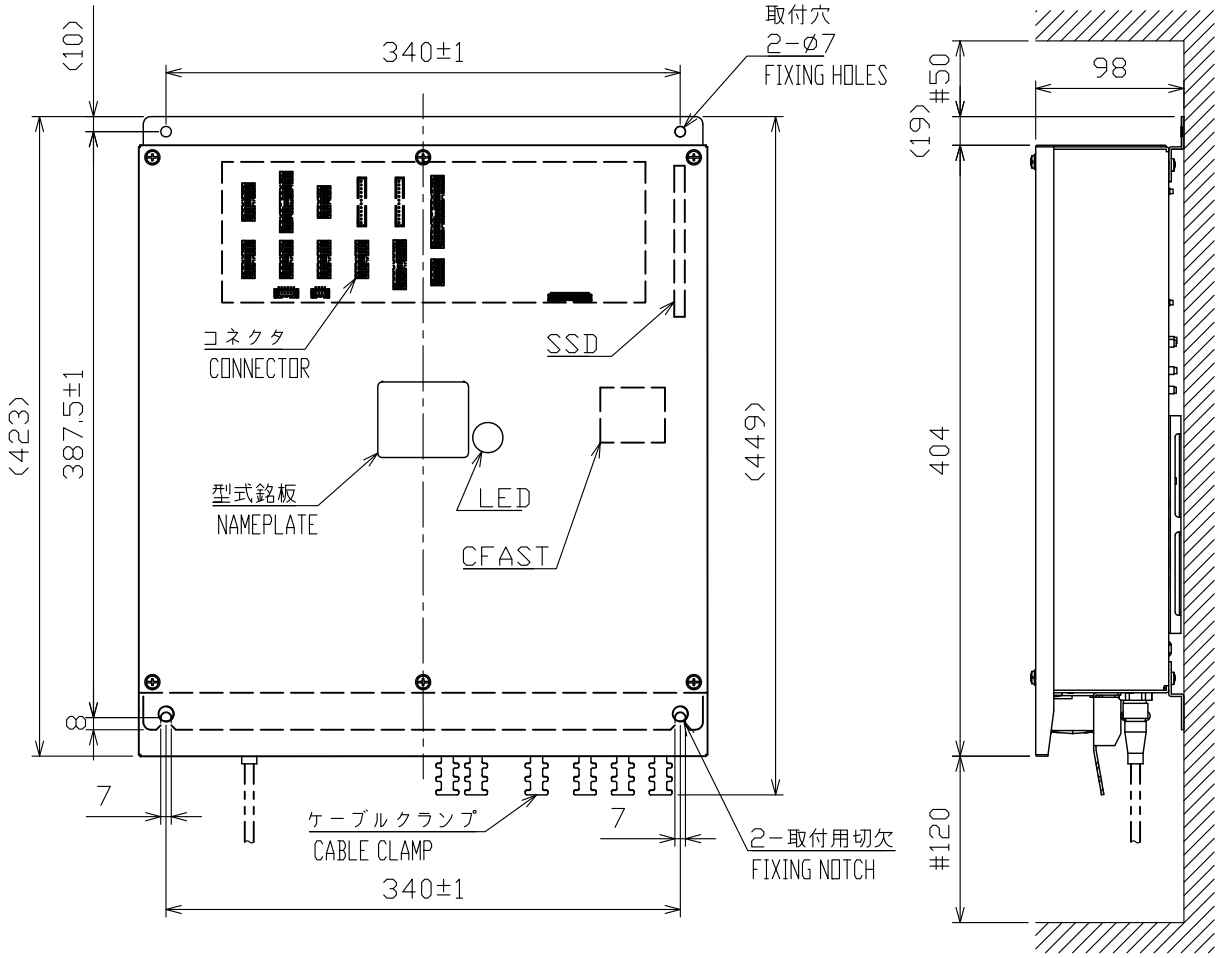

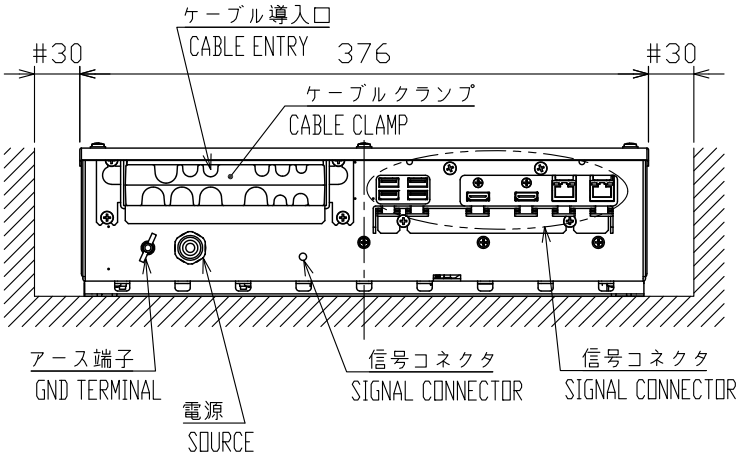

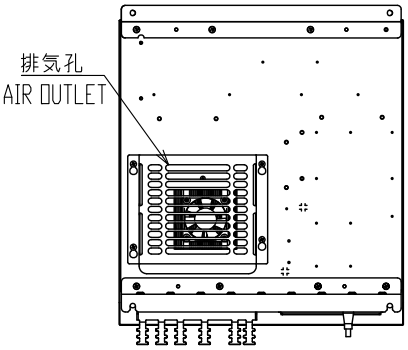

背面　（尺度:1/10）
REAR VIEW (SCALE: 1/10)

注 記
1）指定外の寸法公差は表１による。
2）＃印寸法は最小サービス空間寸法とする。
3）取付ネジはＭ６ボルトまたはコーチネジ呼び径６を使用のこと。

NOTE
1. TABLE 1 INDICATES TOLERANCE OF DIMENSIONS WHICH IS NOT SPECIFIED.
2. #: MINIMUM SERVICE CLEARANCE.
3. USE M6 BOLTS OR COACH SCREWS ø6 FOR FIXING THE UNIT.

表１ TABLE 1

寸法区分（ｍｍ） DIMENSION	公差（ｍｍ） TOLERANCE
Ｌ≦５０	±１．５
５０<Ｌ≦１００	±２．５
１００<Ｌ≦５００	±３

DRAWN 30/Nov/2021 T.YAMASAKI		TITLE	FSV-2503/2503S/8503-MK2
CHECKED 30/Nov/2021 H.MAKI	FSV-28W/28WL MARK-2 ser.	名称	制御部（壁掛装備）
APPROVED 21/Dec/2021 H.MAKI	FSV-25/25S MARK-2 FSV-85/85L MARK-2		外寸図
SCALE 1/5 MASS 7.6 ±10% kg		NAME	PROCESSOR UNIT (BULKHEAD MOUNT)
DWG. No. C1367-G01- B	REF. No. 10-091-160G- 0		OUTLINE DRAWING

FURUNO

D-2

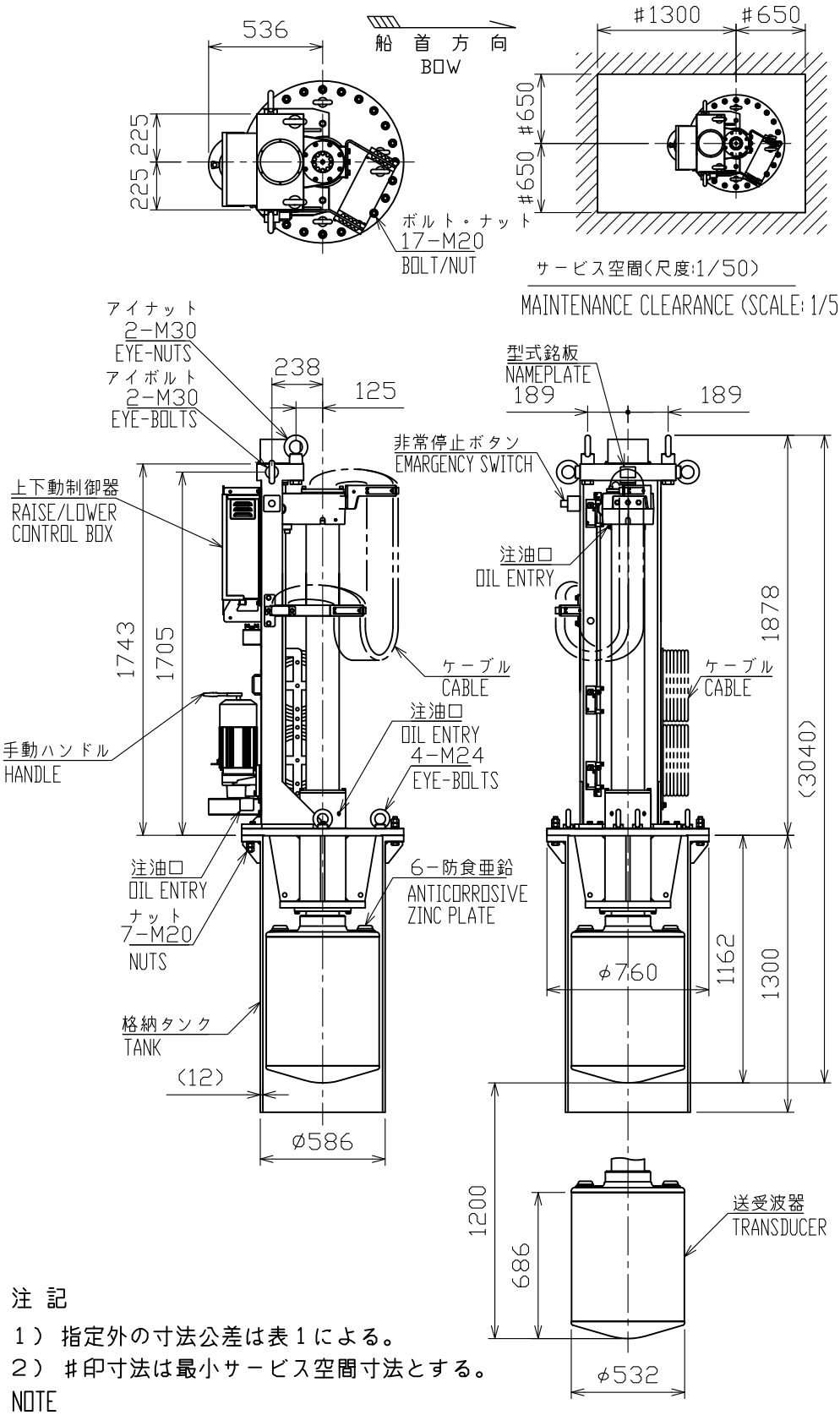

表1 TABLE 1

寸法区分 (mm) DIMENSION	公差 (mm) TOLERANCE
L≦50	±1.5
50<L≦100	±2.5
100<L≦500	±3
500<L≦1000	±4
1000<L≦2000	±5
2000<L≦4000	±7

表2 TABLE 2

ユニット UNIT	質量 (kg±10%) MASS
上下装置本体 (接続箱除く) HULL UNIT (W/O JUNCTION BOX)	830
格納タンク RETRUCTION TANK	260
送受波器 (ケーブル含む) TRANSDUCER (W/ CABLE)	300
総質量 TOTAL	1390

注 記

1) 指定外の寸法公差は表1による。

2) #印寸法は最小サービス空間寸法とする。

NOTE

1. TABLE 1 INDICATES TOLERANCE OF DIMENSIONS WHICH IS NOT SPECIFIED.
2. #: MINIMUM SERVICE CLEARANCE.

DRAWN 30/Nov/2021 T.YAMASAKI			TITLE FSV-253 (-MK2)
CHECKED 30/Nov/2021 H.MAKI			名称 上下装置 (1200ストローク)
APPROVED 21/Dec/2021 H.MAKI	FSV-25/25S MARK-2 FSV-25/25S		外寸図
SCALE 1/30	MASS 表2参照 SEE TABLE 2		NAME HULL UNIT (1200 TRAVEL)
DWG. No. C1344-G01- D	REF. No. 10-089-550G-2		OUTLINE DRAWING

FURUNO ELECTRIC CO., LTD.

FURUNO

D-3

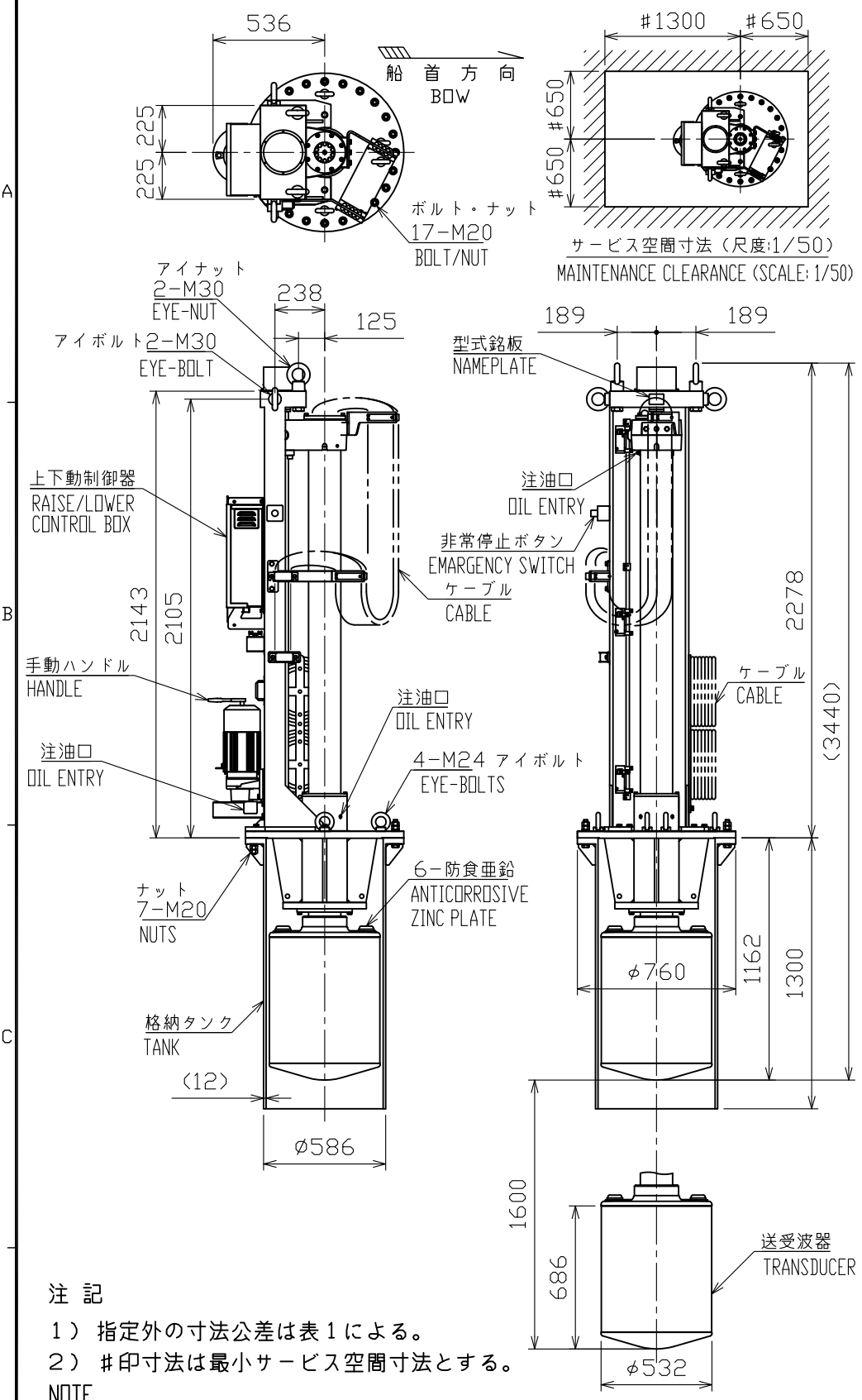

表1 TABLE 1

寸法区分（mm）DIMENSION	公差（mm）TOLERANCE
L≦50	±1.5
50<L≦100	±2.5
100<L≦500	±3
500<L≦1000	±4
1000<L≦2000	±5
2000<L≦4000	±7

表2 TABLE 2

ユニット UNIT	質量(kg±10%) MASS
上下装置本体（接続箱除く） HULL UNIT (W/O JUNCTION BOX)	880
格納タンク RETRUCTION TANK	260
送受波器（ケーブル含む） TRANSDUCER (W/ CABLE)	300
総質量 TOTAL	1440

注 記

1） 指定外の寸法公差は表1による。

2） #印寸法は最小サービス空間寸法とする。

NOTE

1. TABLE 1 INDICATES TOLERANCE OF DIMENSIONS WHICH IS NOT SPECIFIED.
2. #: MINIMUM SERVICE CLEARANCE.

DRAWN 30/Nov/2021 T.YAMASAKI		TITLE	FSV-254 (-MK2)
CHECKED 30/Nov/2021 H.MAKI		名称	上下装置（1600ストローク）
APPROVED 21/Dec/2021 H.MAKI	FSV-25/25S MARK-2 FSV-25/25S		外寸図
SCALE 1/30	MASS 表2参照 SEE TABLE 2	NAME	HULL UNIT (1600 TRAVEL)
DWG. No. C1344-G02- D	REF. No. 10-089-551G-2		OUTLINE DRAWING

FURUNO ELECTRIC CO., LTD.

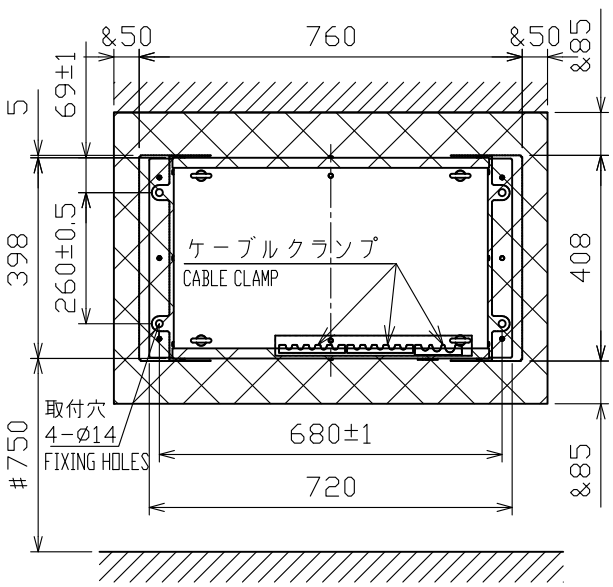

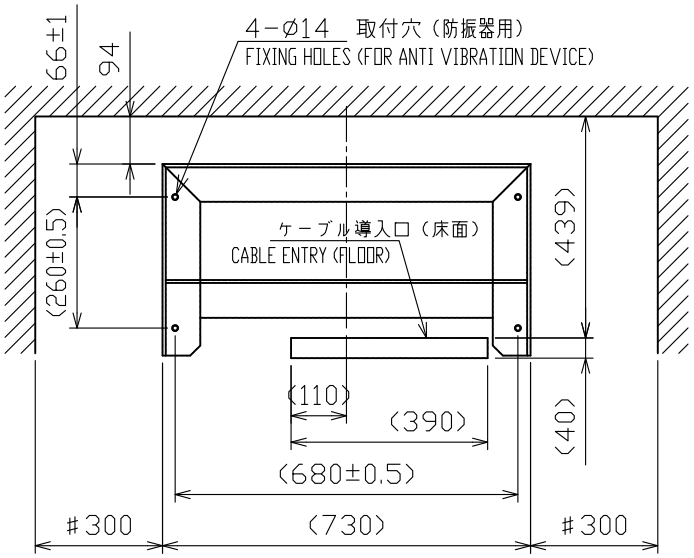

架台及び床面ケーブル導入口寸法（参考）
MOUNTING BASE AND CABLE ENTRY DIMENSIONS (REFERENCE)

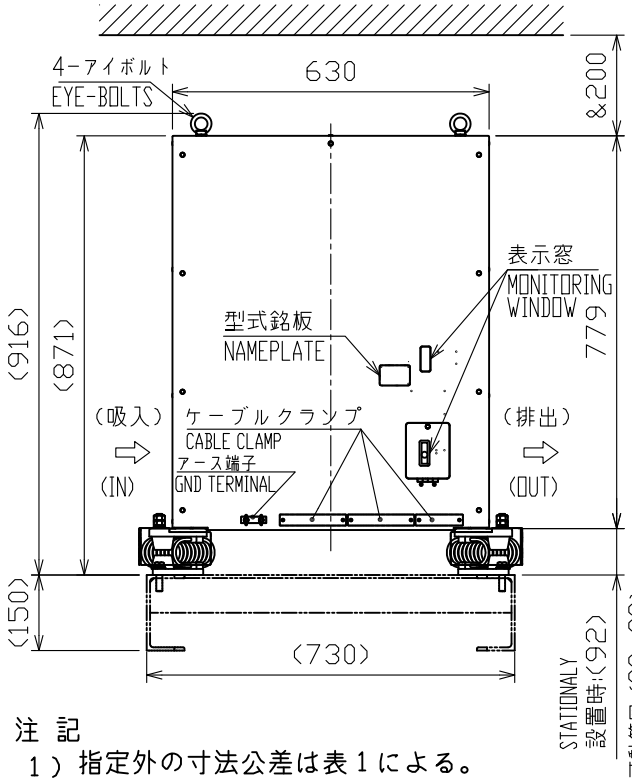

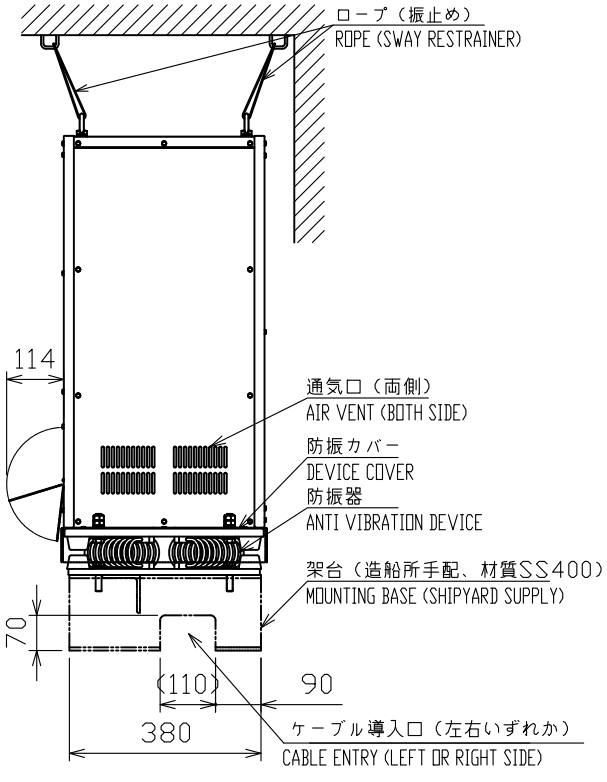

注 記

1）指定外の寸法公差は表１による。
2）＃印寸法は最小サービス空間寸法とする。
3）＆印寸法は立入り禁止区域とする。
4）取付用ネジはＭ１２ボルト（ＳＵＳ３０４）を使用のこと。
5）直接床置きの場合のみ床面ケーブル導入口を設けること。

NOTE

1. TABLE 1 INDICATES TOLERANCE OF DIMENSIONS WHICH IS NOT SPECIFIED.
2. #: MINIMUM SERVICE CLEARANCE.
3. &: SAFETY CLEARANCE.
4. USE M12 BOLTS (SUS304) FOR FIXING THE UNIT.
5. MAKE A CABLE ENTRY HOLE ON FLOOR WHEN THE MOUNTING BASE IS NOT USED.

表1 TABLE 1

寸法区分（mm） DIMENSION	公差（mm） TOLERANCE
L≦50	±1.5
50<L≦100	±2.5
100<L≦500	±3
500<L≦1000	±4

DRAWN 30/Nov/2021 T.YAMASAKI		TITLE	FSV-251-MK2
CHECKED 30/Nov/2021 H.MAKI		名称	送受信装置
APPROVED 21/Dec/2021 H.MAKI	FSV-28W/28WL MARK-2 ser. FSV-25/25S MARK-2		外寸図
SCALE 1/15	MASS 138 ±10% kg	NAME	TRANSCEIVER UNIT
DWG. No. C1369-G01- A	REF. No. 10-091-850G- 1		OUTLINE DRAWING

FURUNO

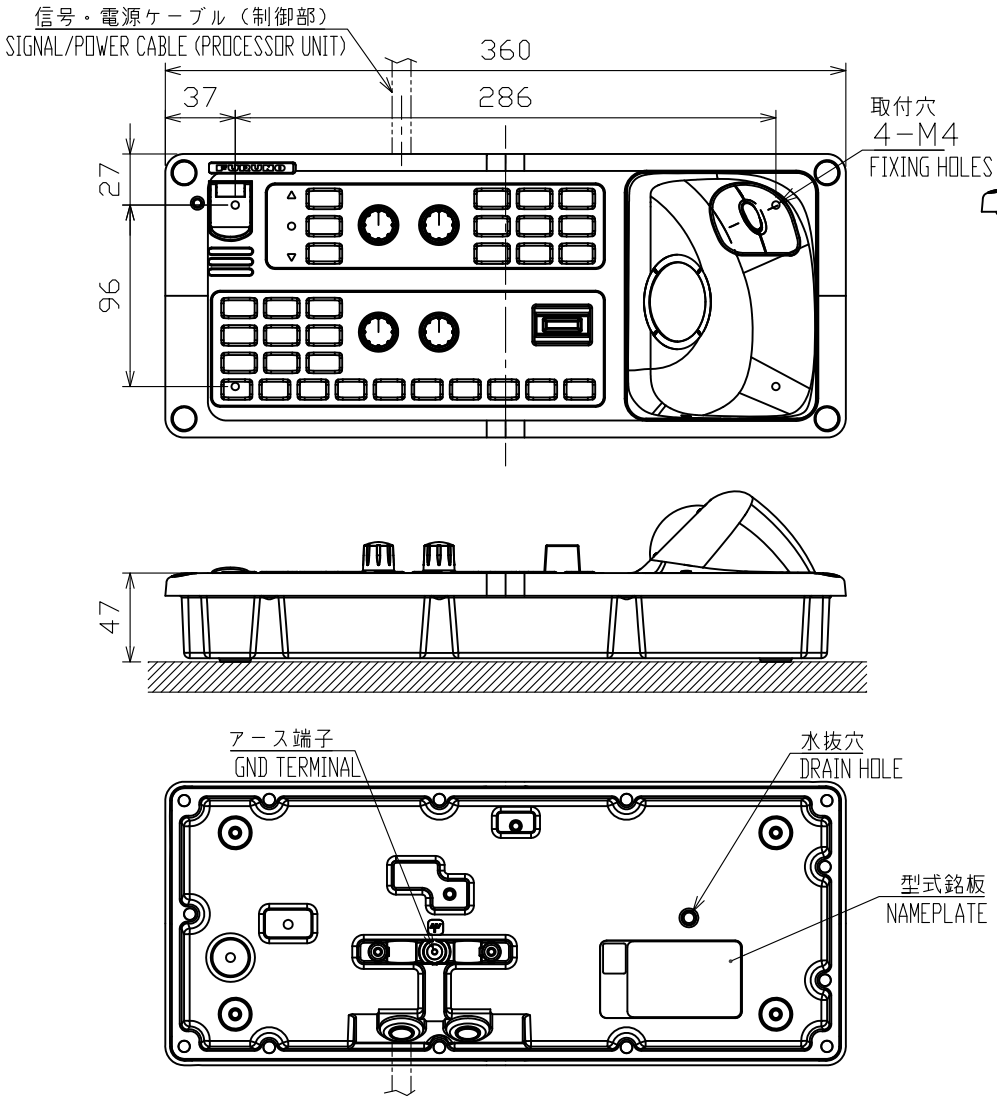

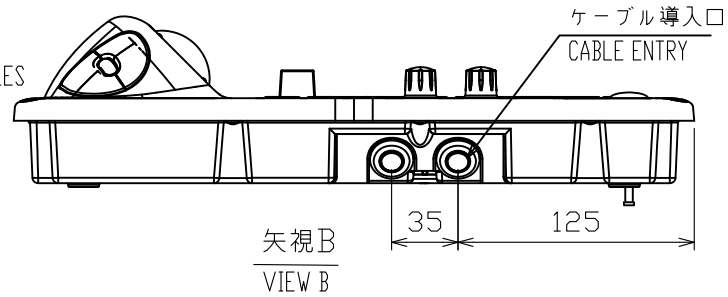

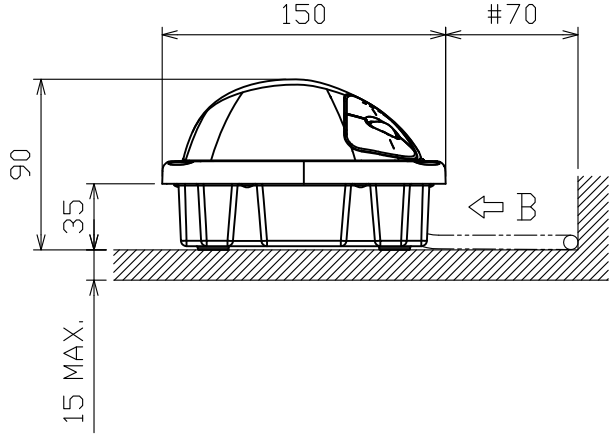

表1 TABLE 1

寸法区分（mm）DIMENSION	公差（mm）TOLERANCE
L≦50	±1.5
50<L≦100	±2.5
100<L≦500	±3

表2 TABLE 2

ケーブル長(m) CABLE LENGTH	質量(kg±10%) MASS
5	1.8
10	2.4

NOTE

1. TABLE 1 INDICATES TOLERANCE OF DIMENSIONS WHICH IS NOT SPECIFIED.
2. #: MINIMUM SERVICE CLEARANCE.
3. USE STUD BOLTS M4x50 AND WING NUTS FOR FIXING THE UNIT.

注　記

１）指定外の寸法公差は表１による。

２）＃印寸法は最小サービス空間寸法とする。

３）取付用ネジは寸切りボルトＭ４×５０と蝶ナットを使用のこと。

DRAWN 30/Nov/2021 T.YAMASAKI		TITLE	FSV-8501-MK2
CHECKED 30/Nov/2021 H.MAKI	FSV-28W/28WL MARK-2 ser.	名称	操作部（卓上装備）
APPROVED 21/Dec/2021 H.MAKI	FSV-25/25S MARK-2 FSV-85/85L MARK-2		外寸図
SCALE 1/4 MASS 表2参照 TABLE 2		NAME	CONTROL UNIT (TABLETOP MOUNT)
DWG.No. C1367-G04- B	REF.No. 10-091-150G-1		OUTLINE DRAWING

FURUNO ELECTRIC CO., LTD.

FURUNO

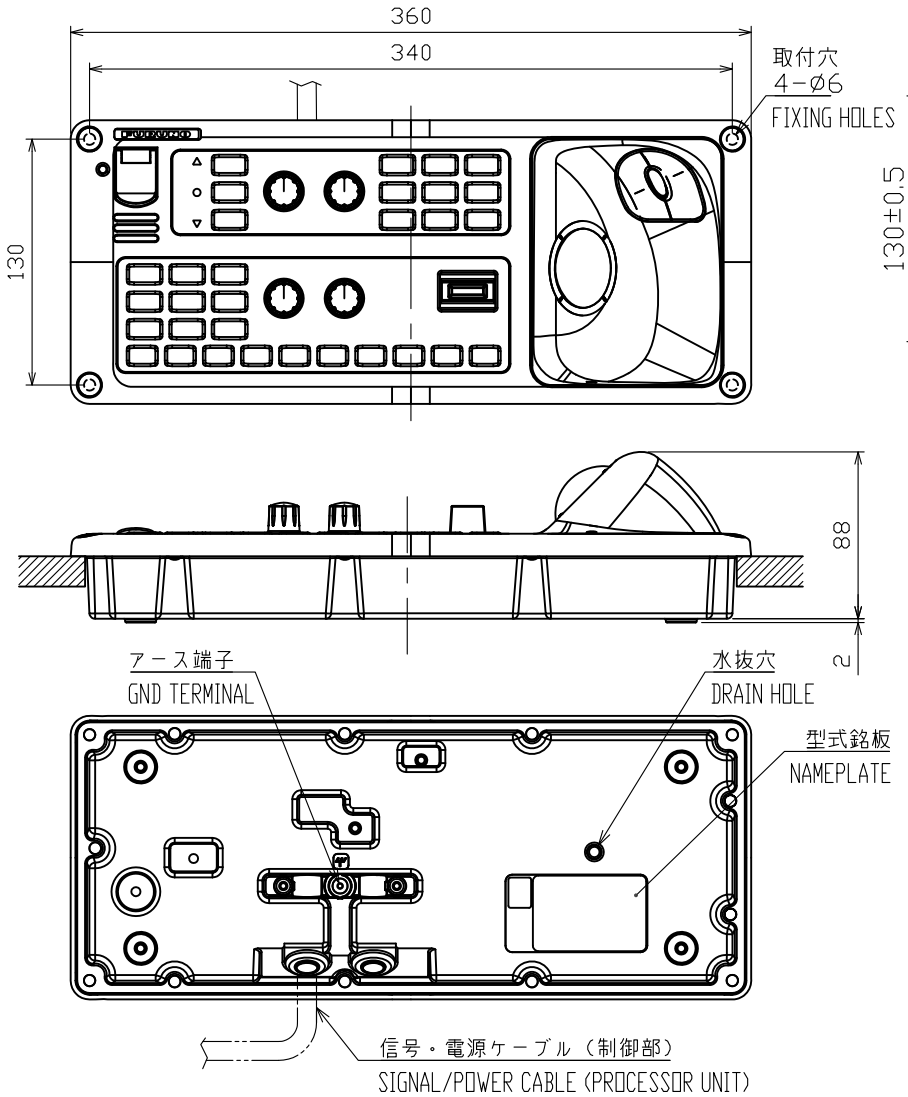

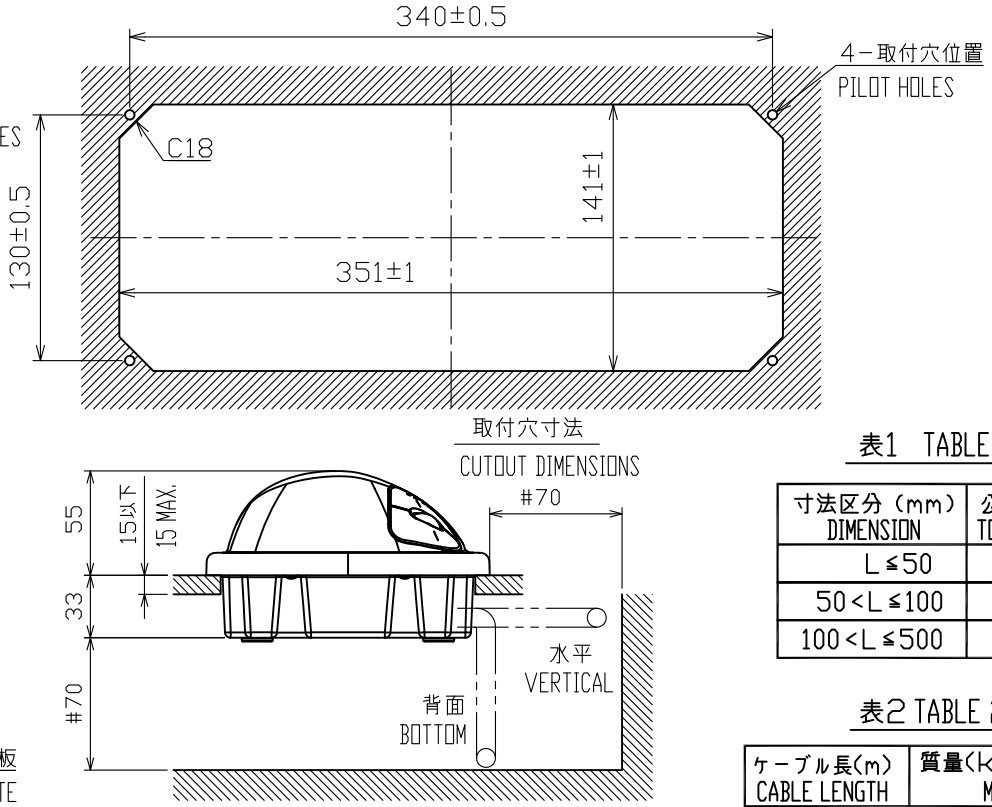

表1 TABLE 1

寸法区分（mm）DIMENSION	公差（mm）TOLERANCE
L≦50	±1.5
50<L≦100	±2.5
100<L≦500	±3

表2 TABLE 2

ケーブル長(m) CABLE LENGTH	質量(kg±10%) MASS
5	1.8
10	2.4

NOTE
1. TABLE 1 INDICATES TOLERANCE OF DIMENSIONS WHICH IS NOT SPECIFIED.
2. #: MINIMUM SERVICE CLEARANCE.
3. USE TAPPING SCREWS ø5x20 FOR FIXING THE UNIT.

注　記
1）指定外の寸法公差は表１による。
2）＃印寸法は最小サービス空間寸法とする。
3）取付用ネジはトラスタッピンネジ呼び径５×２０を使用のこと。

DRAWN 30/Nov/2021 T.YAMASAKI		TITLE	FSV-8501-MK2
CHECKED 30/Nov/2021 H.MAKI	FSV-28W/28WL MARK-2 ser.	名称	操作部（埋込装備）
APPROVED 21/Dec/2021 H.MAKI	FSV-25/25S MARK-2 FSV-85/85L MARK-2		外寸図
SCALE 1/4 MASS 表2参照 TABLE 2		NAME	CONTROL UNIT (FLUSH MOUNT)
DWG.No. C1367-G05- B	REF.No. 10-091-151G-1		OUTLINE DRAWING

FURUNO ELECTRIC CO., LTD.

FURUNO

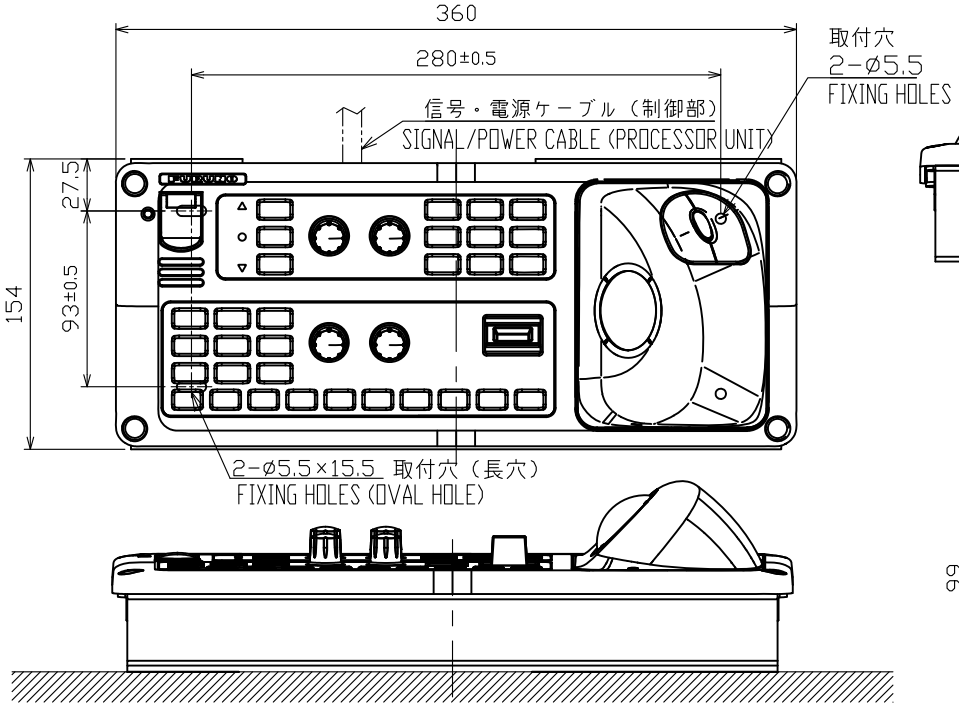

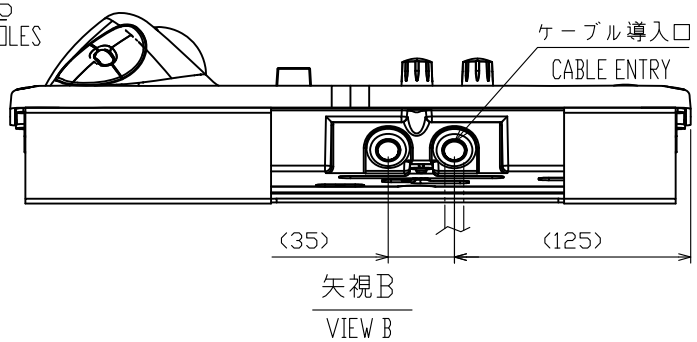

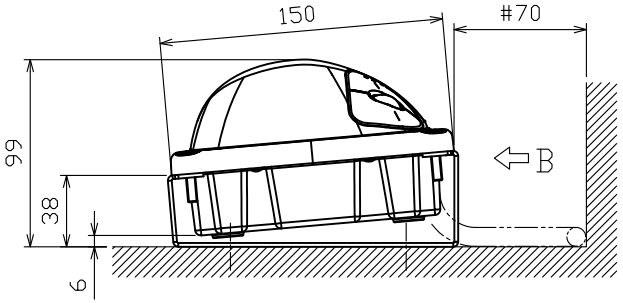

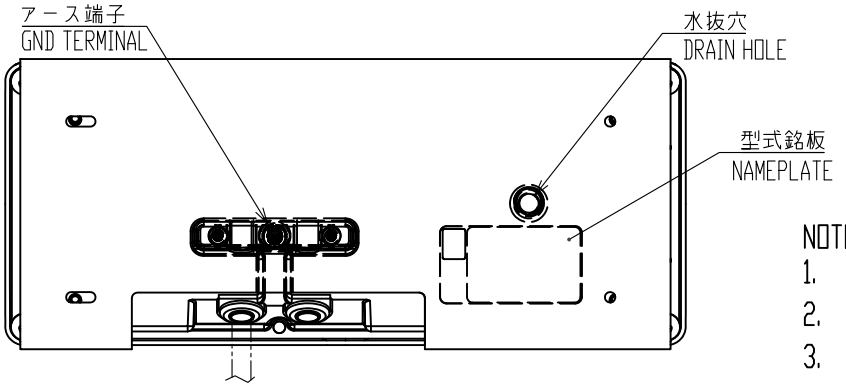

表1 TABLE 1

寸法区分（mm）DIMENSION	公差（mm）TOLERANCE
L≦50	±1.5
50<L≦100	±2.5
100<L≦500	±3

表2 TABLE 2

ケーブル長(m) CABLE LENGTH	質量(kg±10%) MASS
5	2.9
10	3.5

NOTE
1. TABLE 1 INDICATES TOLERANCE OF DIMENSIONS WHICH IS NOT SPECIFIED.
2. #: MINIMUM SERVICE CLEARANCE.
3. USE TAPPING SCREWS ø5x20 FOR FIXING THE UNIT.

注　記
１）指定外の寸法公差は表１による。
２）#印寸法は最小サービス空間寸法とする。
３）取付用ネジはトラスタッピンネジ呼び径５×２０を使用のこと。

DRAWN 30/Nov/2021 T.YAMASAKI		TITLE	FSV-8501-MK2
CHECKED 30/Nov/2021 H.MAKI	FSV-28W/28WL MARK-2 ser.	名称	操作部（取付金具）
APPROVED 21/Dec/2021 H.MAKI	FSV-25/25S MARK-2 FSV-85/85L MARK-2		外寸図
SCALE 1/4 MASS 表2参照 TABLE 2		NAME	CONTROL UNIT (FIXTURE MOUNT)
DWG.No. C1367-G06- B	REF.No. 10-091-152G-1		OUTLINE DRAWING

FURUNO ELECTRIC CO., LTD.

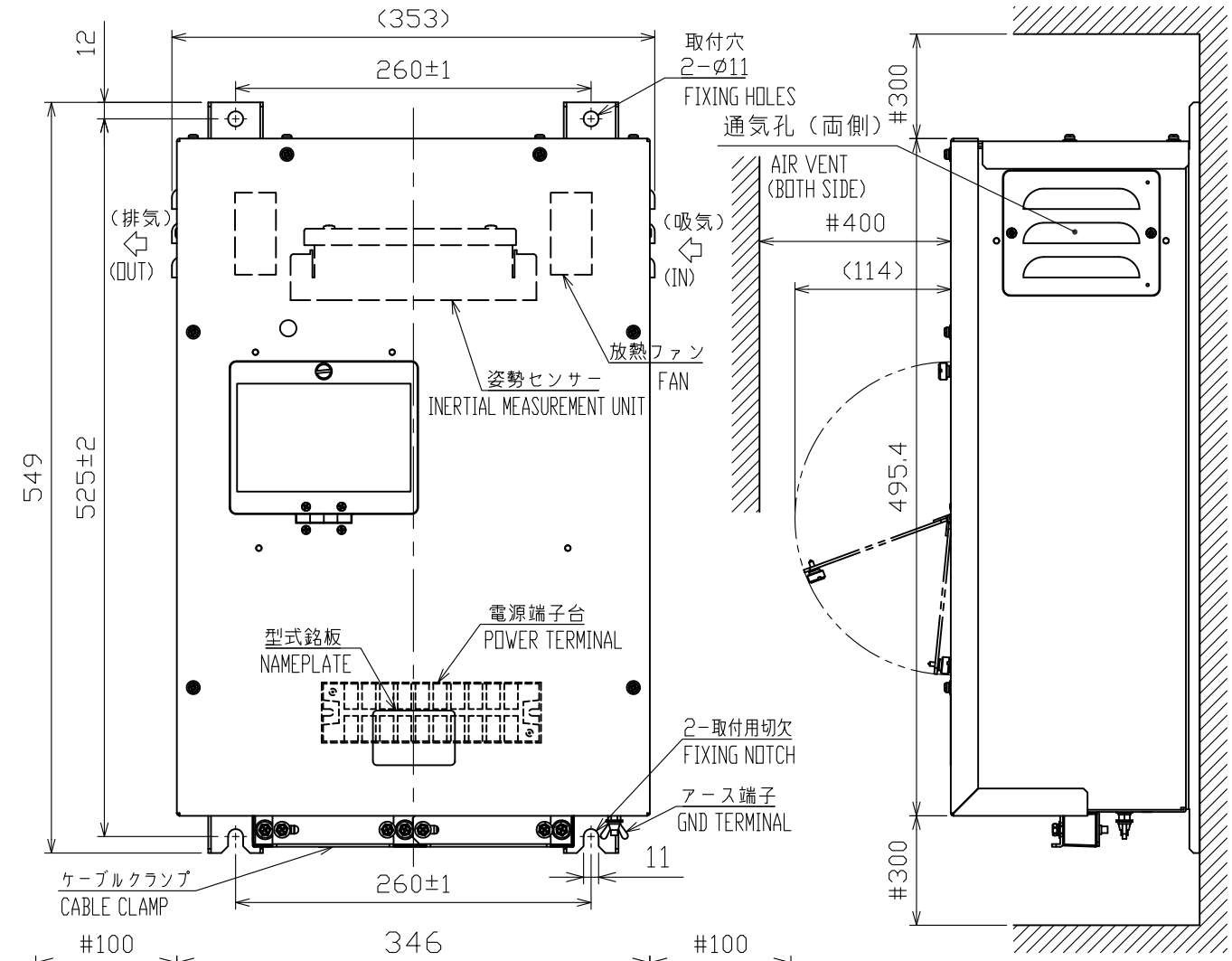

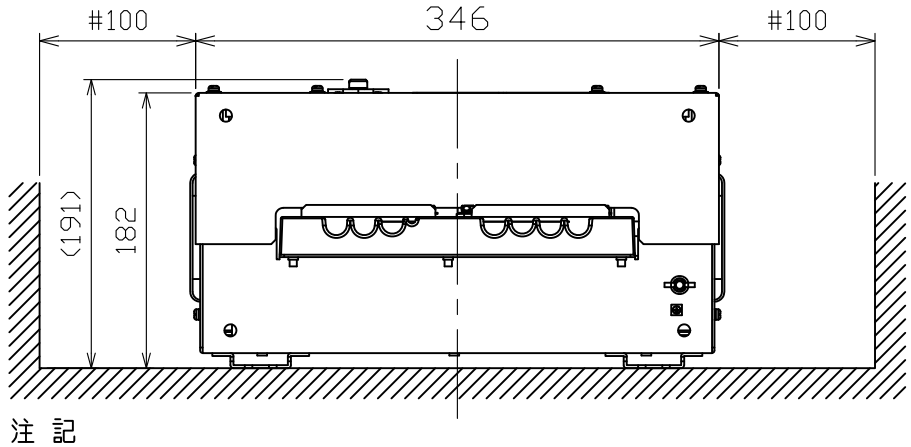

表1 TABLE 1

寸法区分（mm）DIMENSION	公差（mm）TOLERANCE
L≦50	±1.5
50<L≦100	±2.5
100<L≦500	±3
500<L≦1000	±4

注 記

1） 指定外の寸法公差は表１による。
2） #印寸法は最小サービス空間寸法とする。
3） 取付ネジはＭ１０ボルトを使用のこと。

NOTE

1. TABLE 1 INDICATES TOLERANCE OF DIMENSIONS WHICH IS NOT SPECIFIED.
2. #: MINIMUM SERVICE CLEARANCE.
3. USE M10 BOLTS FOR FIXING THE UNIT.

表2 TABLE 2

延長箱（オプション）EXTENSION BOX (OPTION)	無 NO	有 YES
放熱ファン FAN	有 YES	無 NO
質量 MASS (kg±10%)	17.9	16.2

延長箱使用時、放熱ファンは延長箱に取付け
REMOUNT FANS ONTO THE EXTENSION BOX WHEN AN EXTENSION BOX IS USED.

DRAWN 30/Nov/2021 T.YAMASAKI		TITLE	FSV-2530 (-MK2)
CHECKED 30/Nov/2021 H.MAKI		名称	上下動制御器（壁掛装備）
APPROVED 21/Dec/2021 H.MAKI	FSV-25/28W (MARK-2) ser.		外寸図
SCALE 1/5	MASS 表2参照 SEE TABLE 2	NAME	LAISE/LOWER CONTROL UNIT (BULKHEAD MOUNT)
DWG. No. C1344-G09- C	REF. No. 10-089-580G-3		OUTLINE DRAWING

FURUNO

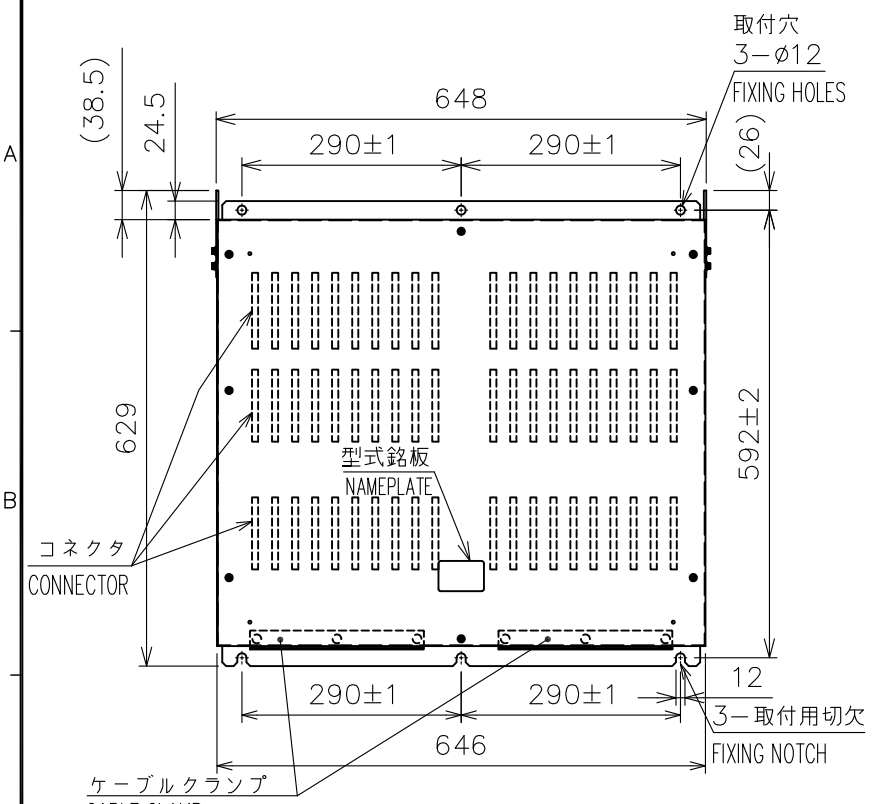

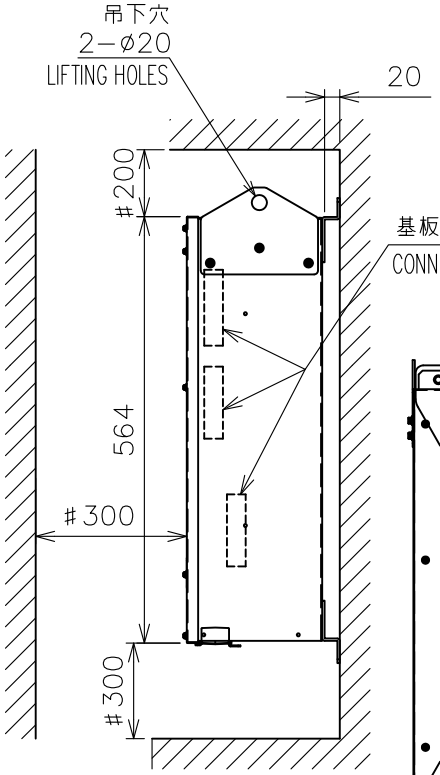

表1 TABLE 1

寸法区分（mm） DIMENSION	公差（mm） TOLERANCE
L≦50	±1.5
50<L≦100	±2.5
100<L≦500	±3
500<L≦1000	±4

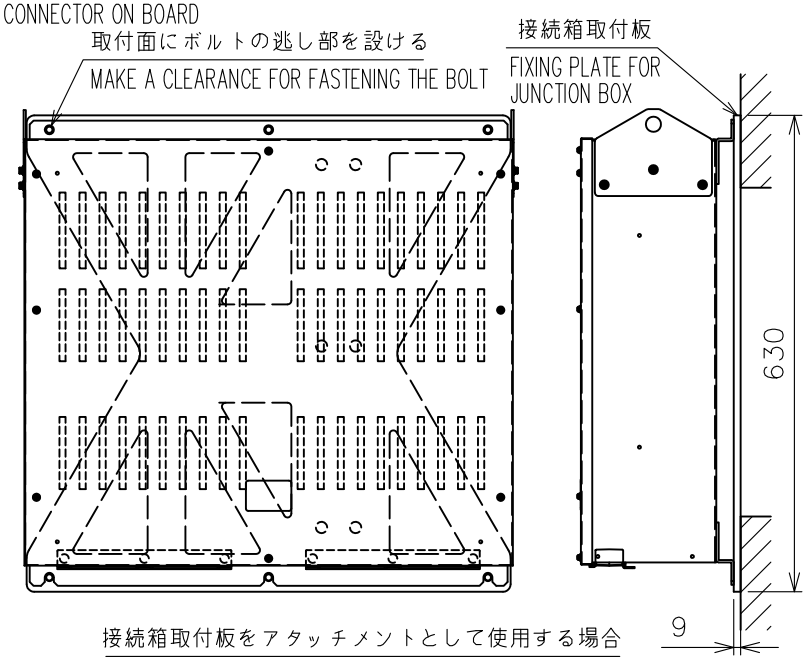

接続箱取付板をアタッチメントとして使用する場合
FOR USING FIXING PLATE AS AN ATTACHMENT PANEL

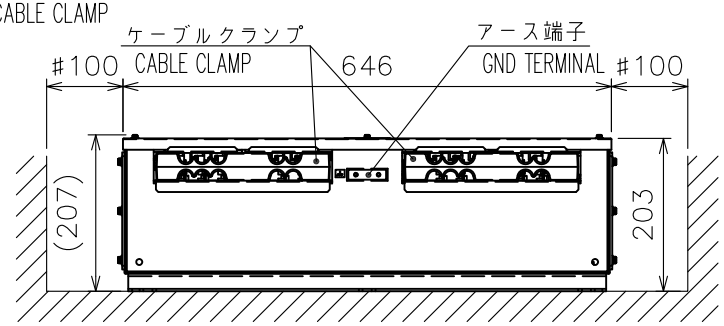

NOTE
1. TABLE 1 INDICATES TOLERANCE OF DIMENSIONS WHICH IS NOT SPECIFIED.
2. #: MINIMUM SERVICE CLEARANCE.
3. USE M10 BOLTS FOR FIXING THE UNIT.

注　記
1） 指定外の寸法公差は表１による。
2） #印寸法は最小サービス空間寸法とする。
3） 取付はM10ボルトを使用のこと。

DRAWN 30/Nov/2021 T.YAMASAKI		TITLE	FSV-2550 (-MK2)
CHECKED 30/Nov/2021 H.MAKI		名称	接続箱（壁掛装備）
APPROVED 21/Dec/2021 H.MAKI	FSV-25/28W (MARK-2) ser.		外寸図
SCALE 1/10 MASS 46 ±10% kg		NAME	JUNCTION BOX (BULKHEAD MOUNT)
DWG.No. C1344-G11- C	REF.No. 10-089-700G-2		OUTLINE DRAWING

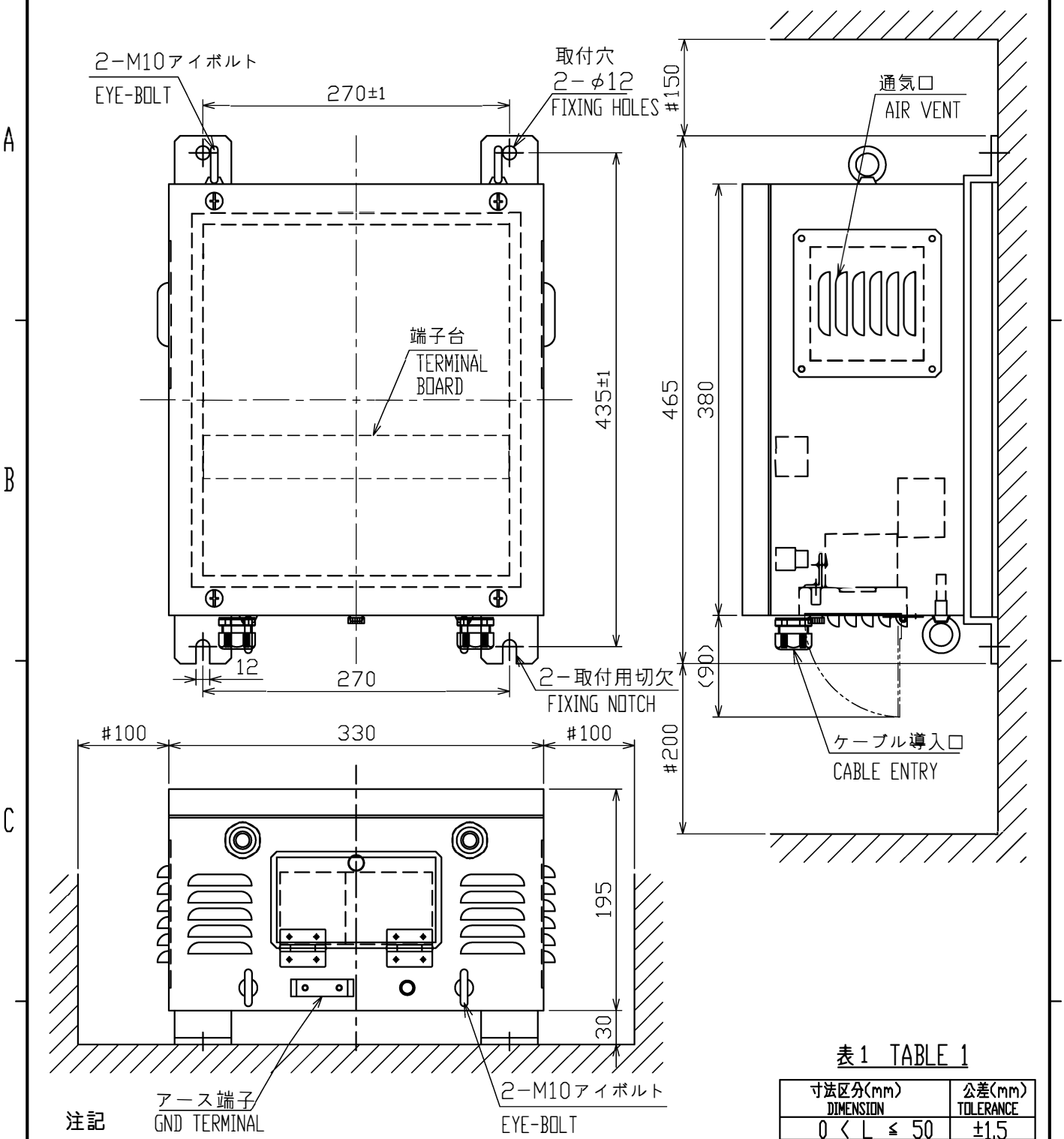

表1 TABLE 1

寸法区分(mm) DIMENSION	公差(mm) TOLERANCE
0 < L ≦ 50	±1.5
50 < L ≦ 100	±2.5
100 < L ≦ 500	±3

注記
1）指定なき寸法公差は表1による。
2）#印寸法は最小サービス空間寸法とする。
3）取付にはM10ボルトを使用のこと。

NOTE
1. TABLE 1 INDICATES TOLERANCE OF DIMENSIONS WHICH IS NOT SPECIFIED.
2. #: MINIMUM SERVICE CLEARANCE.
3. USE M10 BOLTS FOR FIXING THE UNIT.

DRAWN 30/Nov/2021 T.YAMASAKI			TITLE FSV-252
CHECKED 30/Nov/2021 H.MAKI			名称 電源装置（壁掛／卓上装備）
APPROVED		FSV-25/28W (MARK-2) ser.	外寸図
SCALE 1/5	MASS 37.5±2 kg		NAME POWER SUPPLY UNIT (BULKHEAD/TABLETOP MOUNT)
DWG. No. C1344-G04- C		REF. No. TR-K-0164	OUTLINE DRAWING

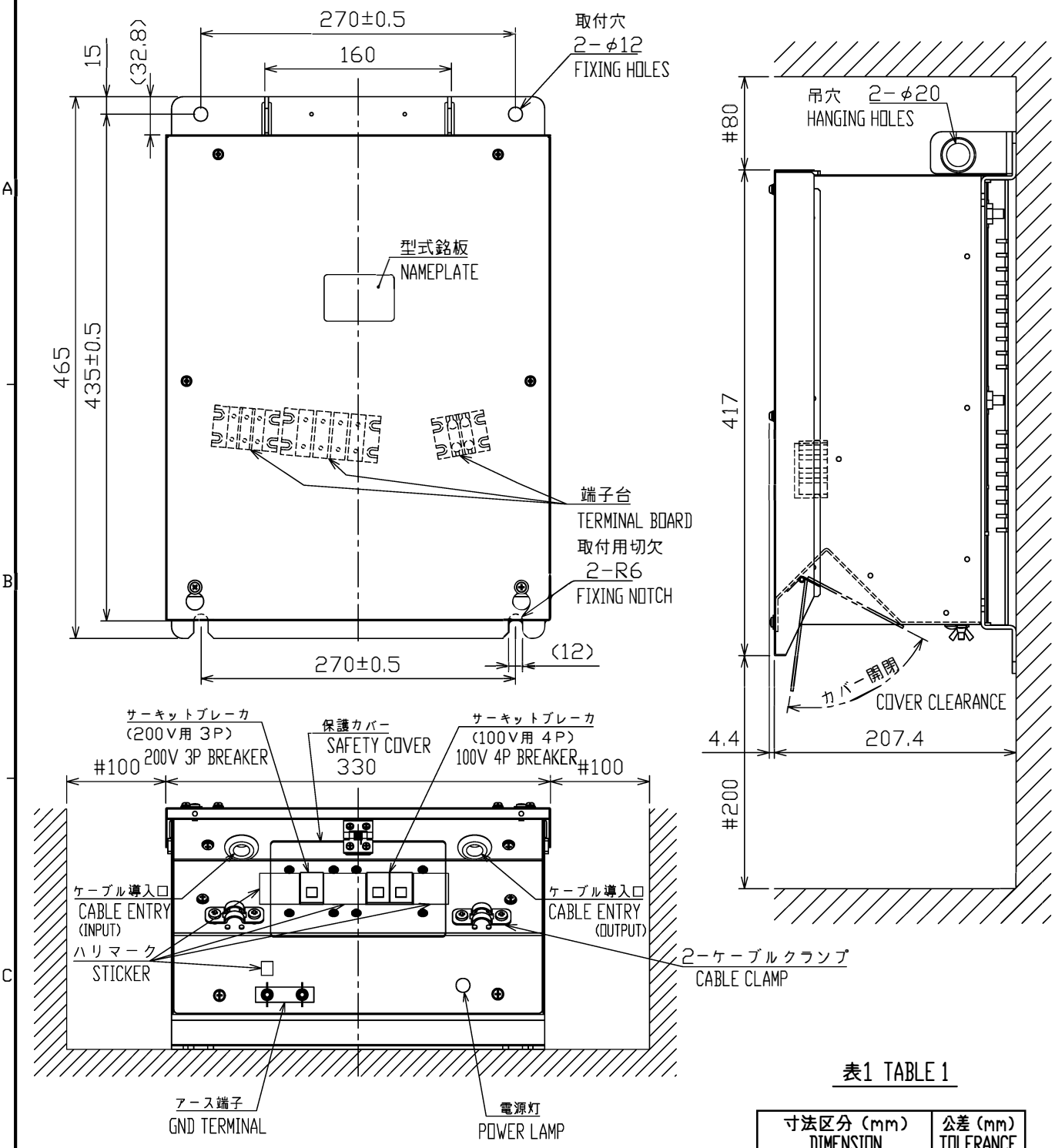

表1 TABLE 1

寸法区分 (mm) DIMENSION	公差 (mm) TOLERANCE
L≦50	±1.5
50<L≦100	±2.5
100<L≦500	±3

注　記
1）　指定外の寸法公差は表１による。
2）　#印寸法は最小サービス空間寸法とする。
3）　取付用ネジはＭ１０ボルト・平座金を使用のこと。

NOTE
1. TABLE 1 INDICATES TOLERANCE OF DIMENSIONS WHICH IS NOT SPECIFIED.
2. #: MINIMUM SERVICE CLEARANCE.
3. USE M10 BOLT/WASHER FOR FIXING THE UNIT.

DRAWN 11/Oct/2022 T.YAMASAKI		TITLE	FSV-252A
CHECKED 11/Oct/2022 H.MAKI		名称	電源装置（壁掛／卓上装備）
APPROVED	FSV-25/28W MARK-2 SER.		外寸図
SCALE 1/5	MASS 27 ±10% kg	NAME	POWER SUPPLY UNIT (BULKHEAD/TABLETOP MOUNT)
DWG. No. C1344-G12- B	REF. No. 10-089-860G- 2		OUTLINE DRAWING

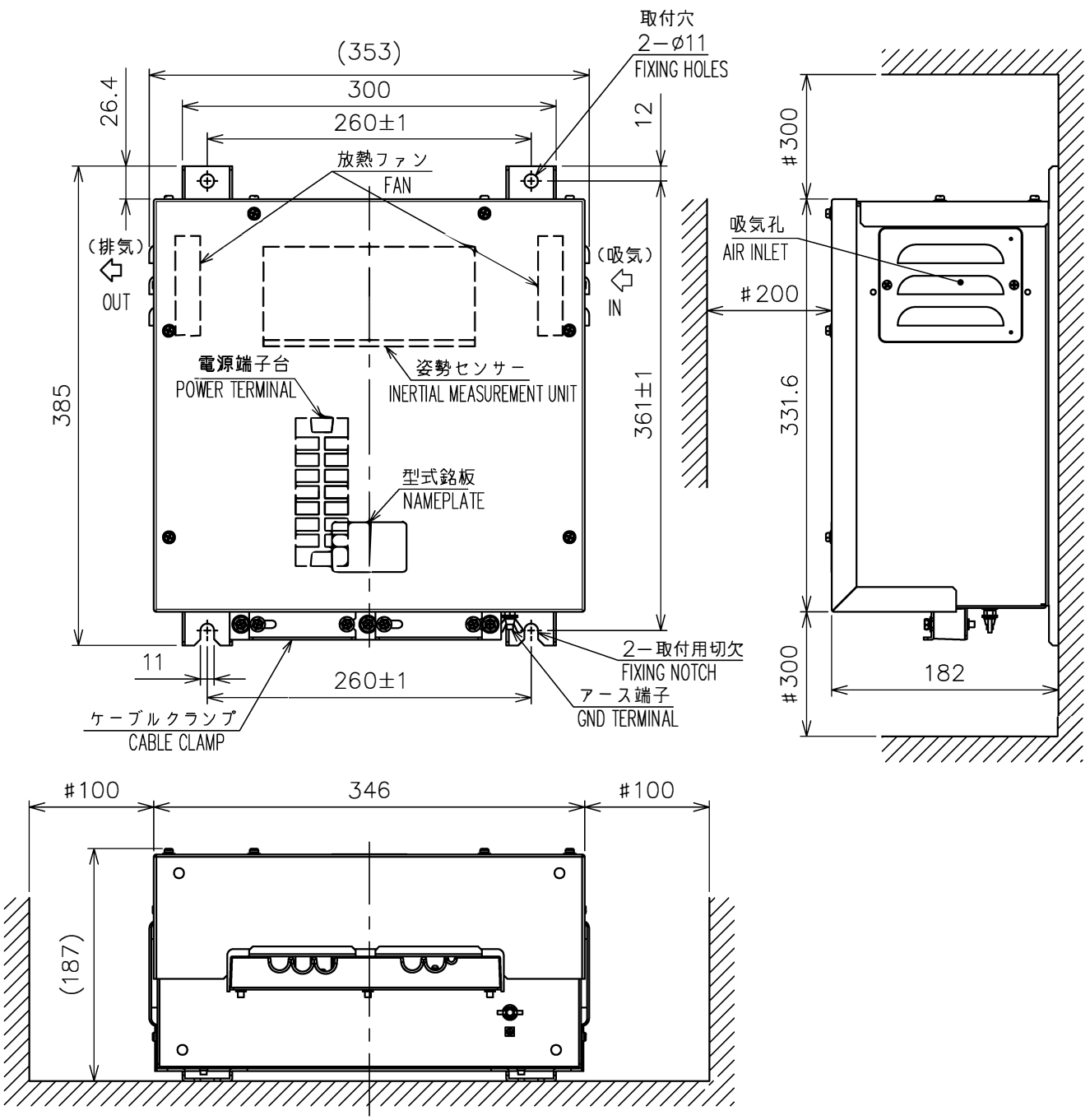

注　記

1）指定外の寸法公差は表1による。

2）#印寸法は最小サービス空間寸法とする。

3）取付はM10ボルトを使用のこと。

NOTE

1. TABLE 1 INDICATES TOLERANCE OF DIMENSIONS WHICH IS NOT SPECIFIED.
2. #: MINIMUM SERVICE CLEARANCE.
3. USE M10 BOLTS FOR FIXING THE UNIT.

表1 TABLE 1

寸法区分（mm） DIMENSION	公差（mm） TOLERANCE
L≦50	±1.5
50<L≦100	±2.5
100<L≦500	±3

DRAWN 30/Nov/2021 T.YAMASAKI		TITLE	FSV-2560
CHECKED 30/Nov/2021 H.MAKI		名称	制御器延長箱（壁掛装備）
APPROVED 13/Dec/2021 H.MAKI	FSV-25/28W (MARK-2) ser.		外寸図
SCALE 1/5 MASS 9.2 kg ±10%		NAME	CONTROL BOX EXTENSION BOX (BULKHEAD MOUNT)
DWG. No. C1344-G10- C	REF. No. 10-089-590G-2		OUTLINE DRAWING

表1 TABLE 1

寸法区分 (mm) DIMENSION	公差 (mm) TOLERANCE
L≦50	±1.5
50<L≦100	±2.5
100<L≦500	±3

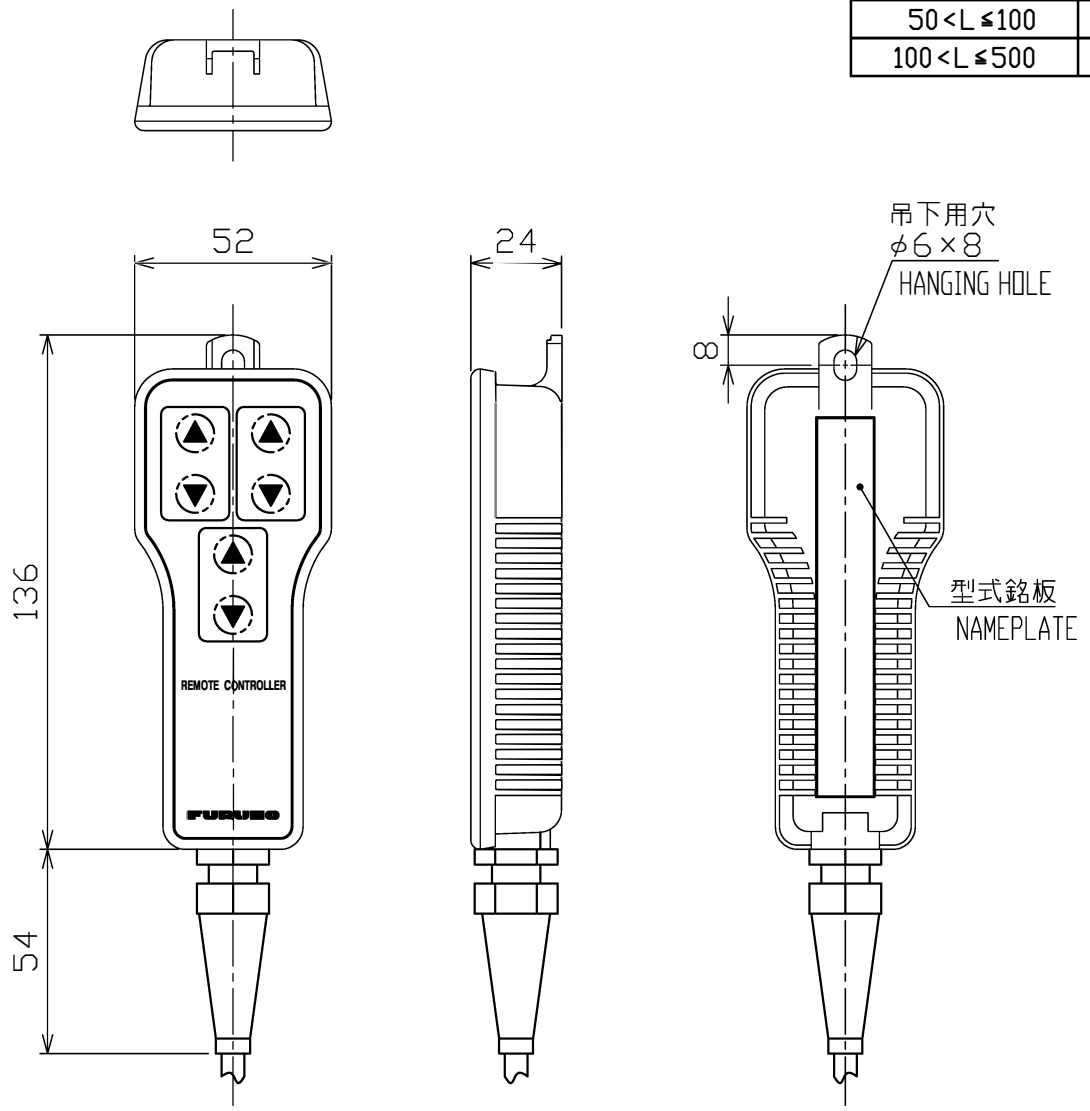

表2 TABLE 2

ケーブル長 (m) CABLE LENGTH	質量 (kg±10%) MASS
5	0.46
10	0.76

注　記

1）指定外の寸法公差は表1による。

NOTE

1. TABLE 1 INDICATES TOLERANCE OF DIMENSIONS WHICH IS NOT SPECIFIED.

DRAWN 30/Nov/2021 T.YAMASAKI		TITLE	FSV-854-MK2
CHECKED 30/Nov/2021 H.MAKI		名称	リモコン
APPROVED	FSV-25/28W MARK-2 ser. FSV-85/85L MARK-2		外寸図
SCALE 1/2 MASS 表2参照 TABLE 2		NAME	REMOTE CONTROLLER
DWG. No. C1367-G07- B	REF. No. 10-091-170G- 1		OUTLINE DRAWING

FURUNO

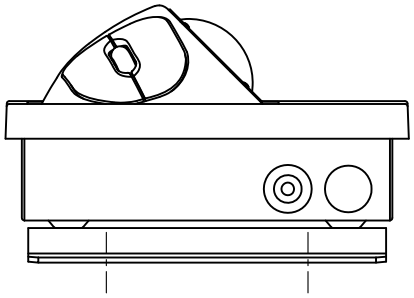

矢視D
VIEW D

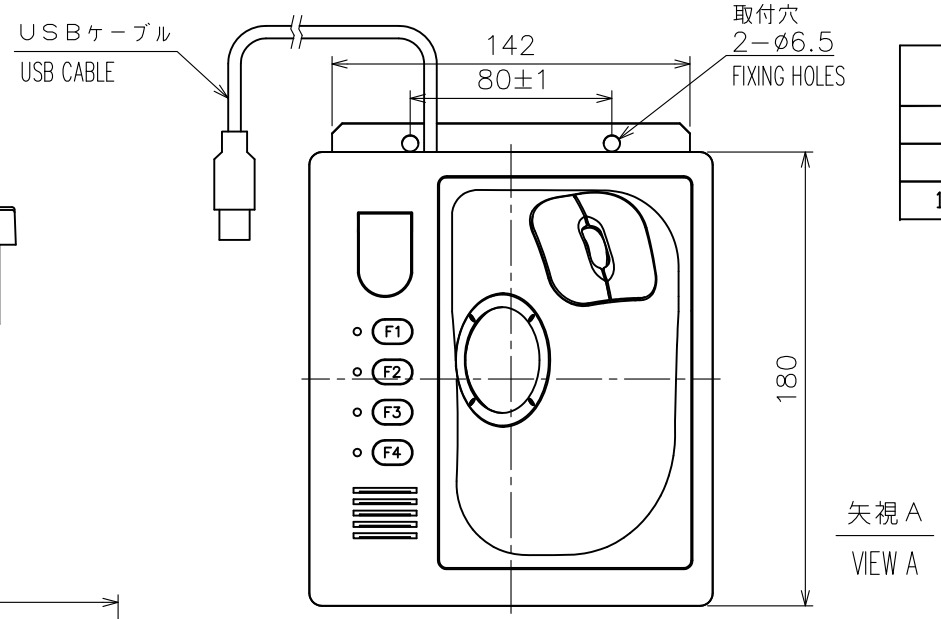

矢視A
VIEW A

表1 TABLE 1

寸法区分（mm） DIMENSION	公差（mm） TOLERANCE
L≦50	±1.5
50<L≦100	±2.5
100<L≦500	±3

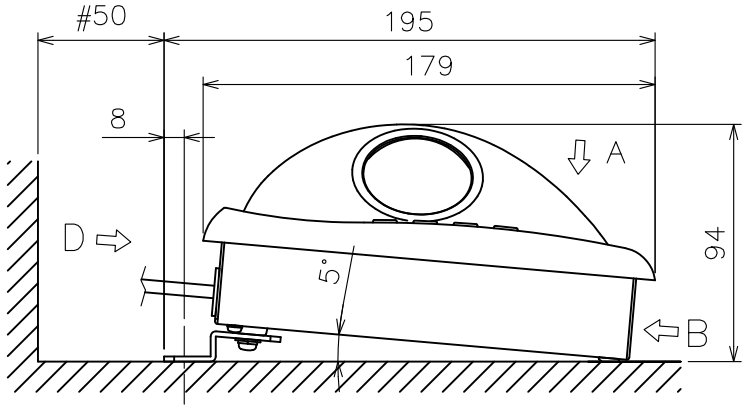

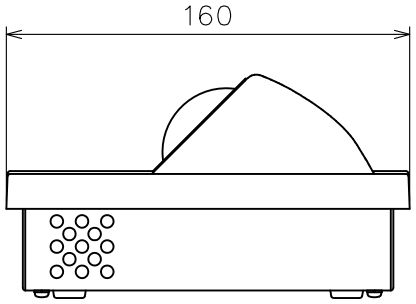

矢視B
VIEW B

注 記 1）指定外の寸法公差は表1による。
2）＃印寸法は最小サービス空間寸法とする。
3）取付用ネジはトラスタッピンネジ呼び径6、またはM6ボルトを使用のこと。

NOTE 1. TABLE 1 INDICATES TOLERANCE OF DIMENSIONS WHICH IS NOT SPECIFIED.
2. #: MINIMUM SERVICE CLEARANCE.
3. USE TAPPING SCREWS ø6 OR M6 BOLTS FOR FIXING THE UNIT.

DRAWN 2/Dec/2021 T.YAMASAKI		TITLE	FSV-853
CHECKED 2/Dec/2021 H.MAKI	FSV-25/28W (MARK-2) ser.	名称	簡易操作部（取付金具）
APPROVED 13/Dec/2021 H.MAKI	FSV-85/85L (MARK-2) ser. FSV-35/35S		外寸図
SCALE 1/3 MASS 1.4 ±10% kg	質量はケーブル（5m）を含む。 MASS INCLUDES 5m CABLE.	NAME	SUB CONTROL UNIT (W/ FIXTURE)
DWG.No. C1335-G07- C	REF.No. 10-088-853G-0		OUTLINE DRAWING

FURUNO ELECTRIC CO., LTD.

FURUNO

表１　TABLE 1

寸法区分（ｍｍ）DIMENSION	公差（ｍｍ）TOLERANCE
Ｌ≦５０	±１．５
５０<Ｌ≦１００	±２．５
１００<Ｌ≦５００	±３

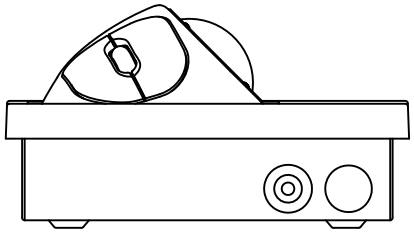

矢視Ａ
VIEW A

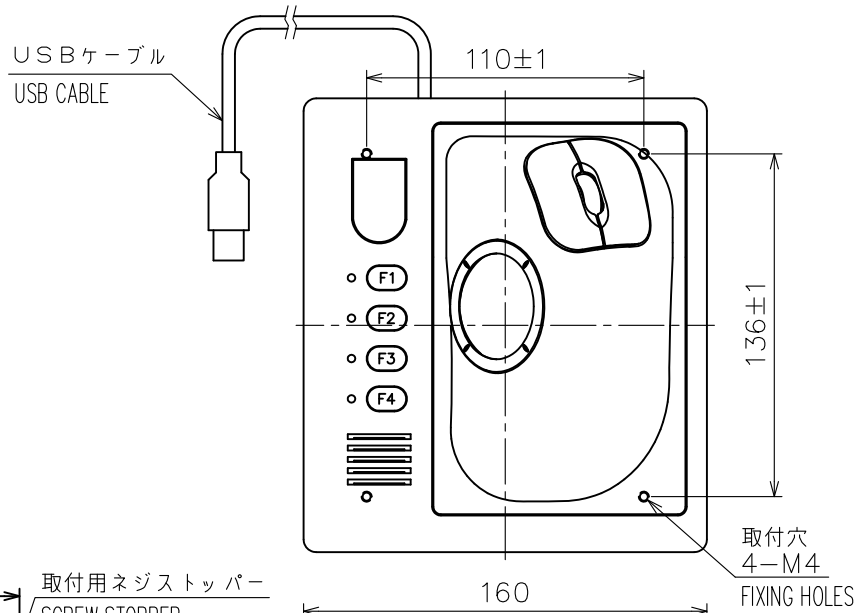

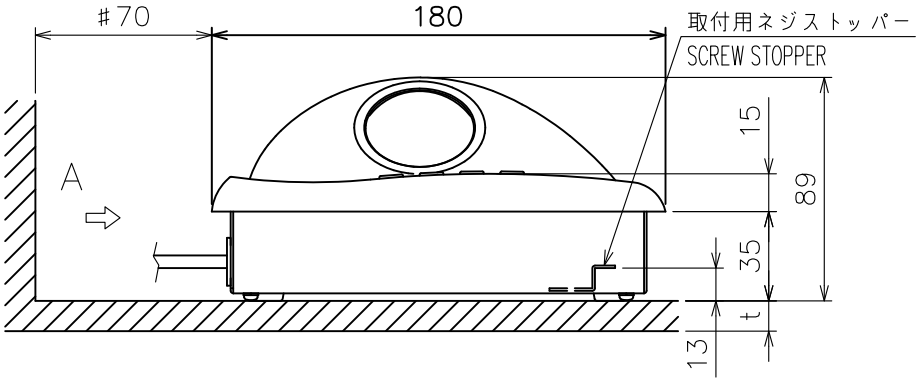

注　記

１）指定外の寸法公差は表１による。

２）＃印寸法は最小サービス空間寸法とする。

３）取付用ネジはセムスＢ（Ｍ４Ｘ１２）を使用のこと。取付面板厚は最小２最大５とする。
　　またはネジ長さ（ｔ＋７．８）±２ のセムスＢを使用のこと。

NOTE

1. TABLE 1 INDICATES TOLERANCE OF DIMENSIONS WHICH IS NOT SPECIFIED.
2. #: MINIMUM SERVICE CLEARANCE.
3. USE SEMS B SCREWS (M4x12) FOR FIXING THE UNIT. MOUNT BOARD THICKNESS (t): 2≦t≦5. OR SCREW LENGTH SHOULD BE (t+7.8)±2 FOR THICKER ONE.

DRAWN 2/Dec/2011 T.YAMASAKI		TITLE	FSV-853
CHECKED 2/Dec/2011 H.MAKI	FSV-25/28W (MARK-2) ser. FSV-85/85I (MARK-2) ser. FSV-35/35S	名称	簡易操作部
APPROVED 13/Dec/2021 H.MAKI			外寸図
SCALE 1/3 MASS 1.4 ±10% kg	質量はケーブル（5m）を含む。 MASS INCLUDES CABLE(5m).	NAME	SUB CONTROL UNIT
DWG.No. C1335-G05- E	REF.No. 10-088-851G-1		OUTLINE DRAWING

FURUNO ELECTRIC CO., LTD.

FURUNO

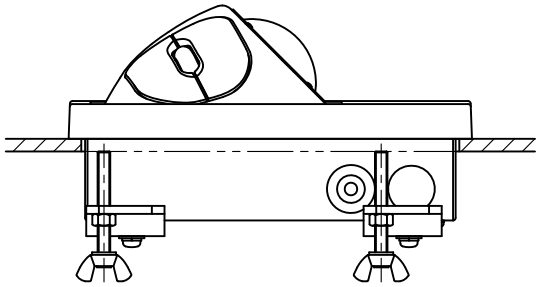

矢視Ａ
VIEW A

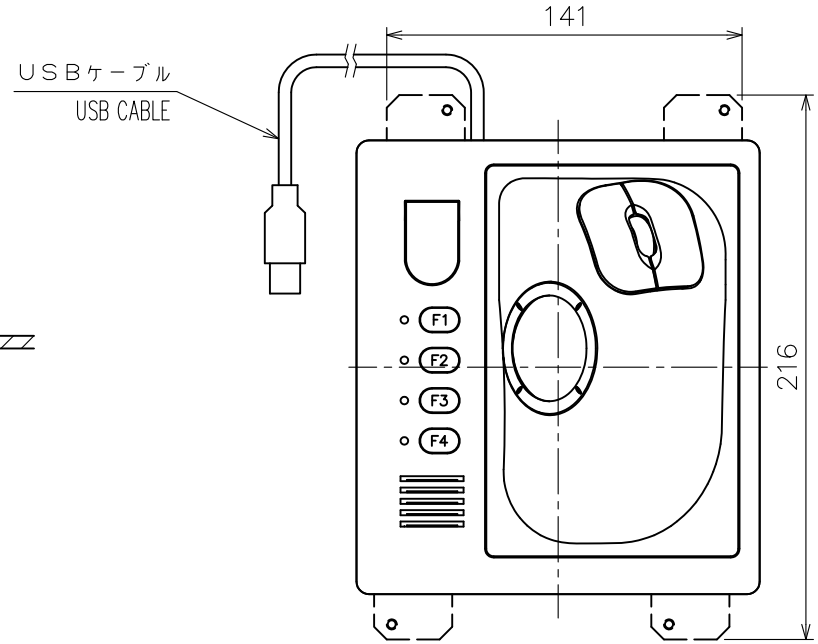

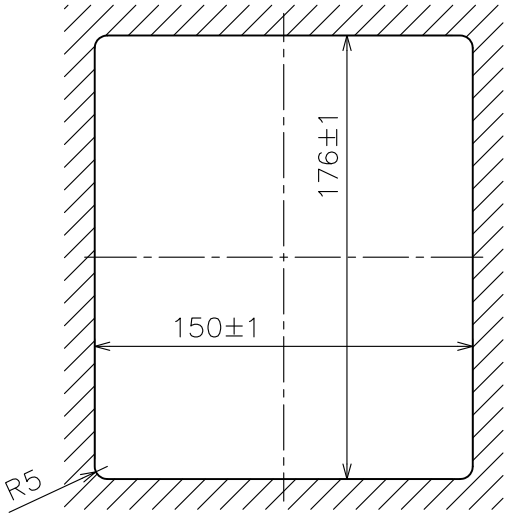

取付穴寸法
CUTOUT DIMENSIONS

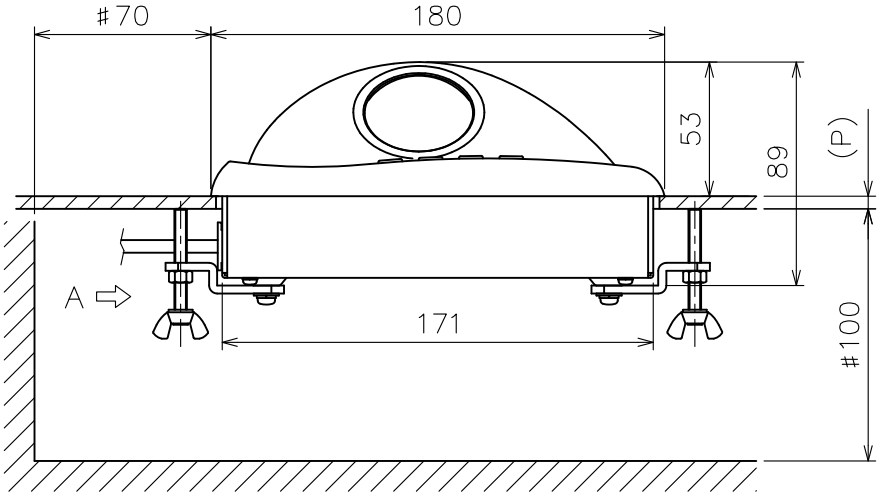

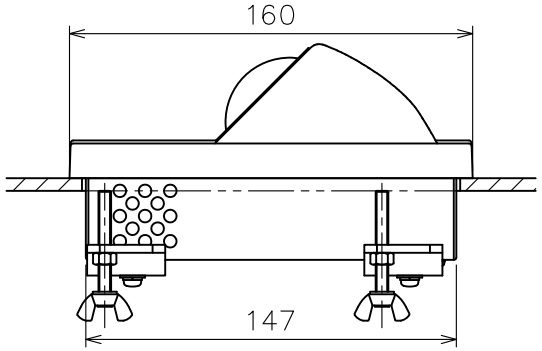

表１ TABLE 1

寸法区分（ｍｍ）DIMENSION	公差（ｍｍ）TOLERANCE
Ｌ≦５０	±１．５
５０<Ｌ≦１００	±２．５
１００<Ｌ≦５００	±３

NOTE
1. TABLE 1 INDICATES TOLERANCE OF DIMENSIONS WHICH IS NOT SPECIFIED.
2. #: MINIMUM SERVICE CLEARANCE.
3. SELECT SIDE OR BOTTOM FOR CABLE ENTRY.
4. THICKNESS (P):10 MAX.

注　記　１）指定外の寸法公差は表１による。
２）＃印寸法は最小サービス空間寸法とする。
３）ケーブル導入口は側面・底面から選択のこと。
４）板厚（Ｐ）は最大１０とする。

DRAWN 2/Dec/2021 T.YAMASAKI			TITLE FSV-853
CHECKED 2/Dec/2021 H.MAKI		FSV-25/28W (MARK-2) ser.	名称 簡易操作部（埋込装備）
APPROVED 13/Dec/2021 H.MAKI		FSV-85/85L (MARK-2) ser. FSV-35/35S	外寸図
SCALE 1/3	MASS 1.4 ±10% kg		NAME SUB CONTROL UNIT (FLUSH MOUNT)
DWG.No. C1335-G08- C		REF.No. 10-088-853G-0	OUTLINE DRAWING

D-16

FURUNO ELECTRIC CO., LTD.

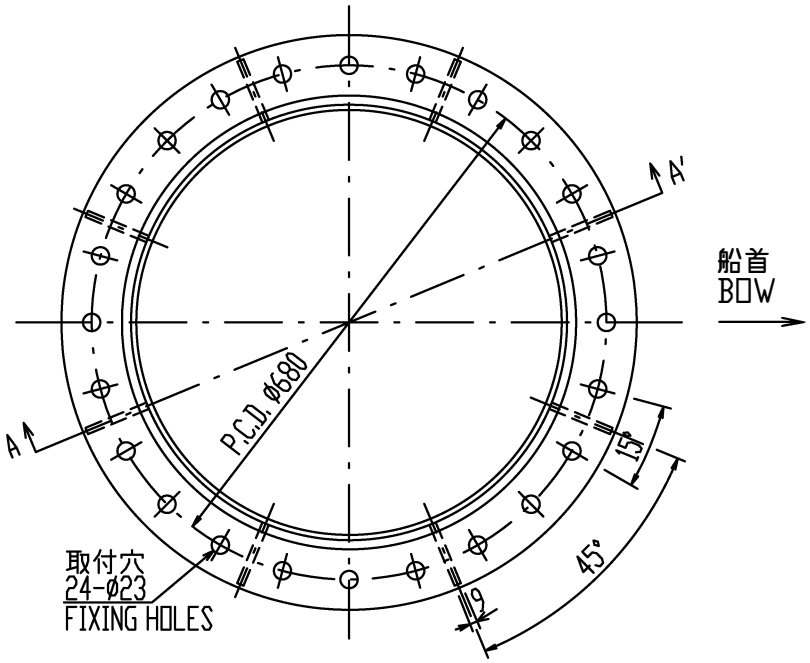

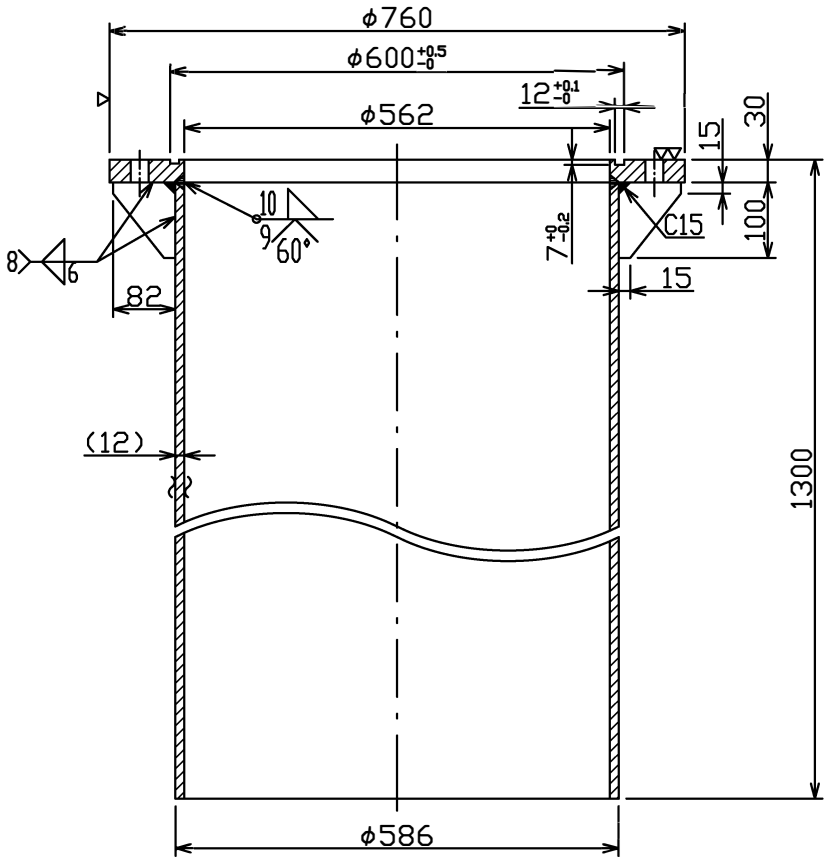

A-A' 断面図
SECTION A-A'

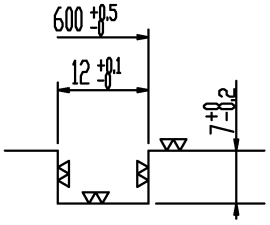

Oリング溝の仕上げ図
FINISHING OF O-RING GROOVE
(尺度 SCALE 1/1)

注記　1）装備時24個のボルト穴のうち適当な1個を船首方向に一致させる。

NOTE　1.　ONE OF 24 BOLT HOLES SHOULD BE FACED DEAD AHEAD.

DRAWN 2/Dec/2021 T.YAMASAKI			TITLE 10-077-5501
CHECKED 2/Dec/2021 H.MAKI			名称 格納タンク
APPROVED 2Dec2021 H.MAKI		FSV-25 MARK-2 ser. FSV-24/25/30/35	外寸図
SCALE 1/10	MASS 260 ±10% kg		NAME RETRACTION TANK
DWG. No. C1318-G16- D		REF. No. 10-077-5501-0	OUTLINE DRAWING

FURUNO

S-1

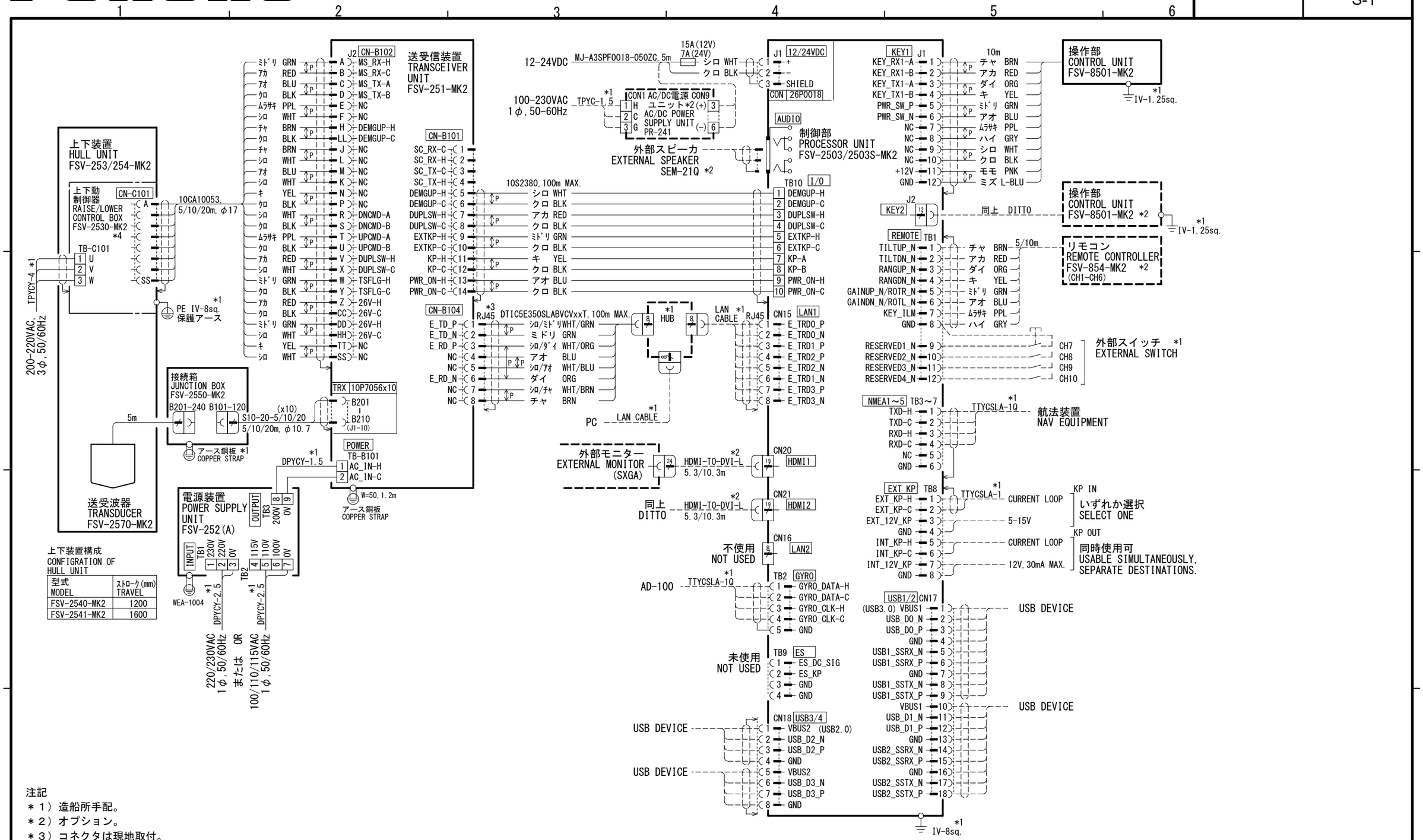

注記
＊１）造船所手配。
＊２）オプション。
＊３）コネクタは現地取付。
＊４）制御器延長箱（オプション）使用で上下動制御器を上下装置から5m離して取付可能。

NOTE
*1: SHIPYARD SUPPLY.
*2: OPTION.
*3: FIT CONNECTOR AT LOCAL.
*4: CONTROL BOX EXTENSION BOX (OPTION) MAY EXTEND TO 5m BETWEEN RAISE/LOWER CONTROL BOX AND HULL UNIT.

DRAWN 18/May/2022 T. YAMASAKI			TITLE FSV-25/25S MARK-2
CHECKED 18/May/2022 H. MAKI			名称 カラースキャニングソナー
APPROVED 13/Oct/2022 H.MAKI			相互結線図
SCALE	MASS kg		NAME COLOR SCANNING SONAR
DWG No. C1369-C01- B		REF. No.	INTERCONNECTION DIAGRAM

FURUNO ELECTRIC CO., LTD.

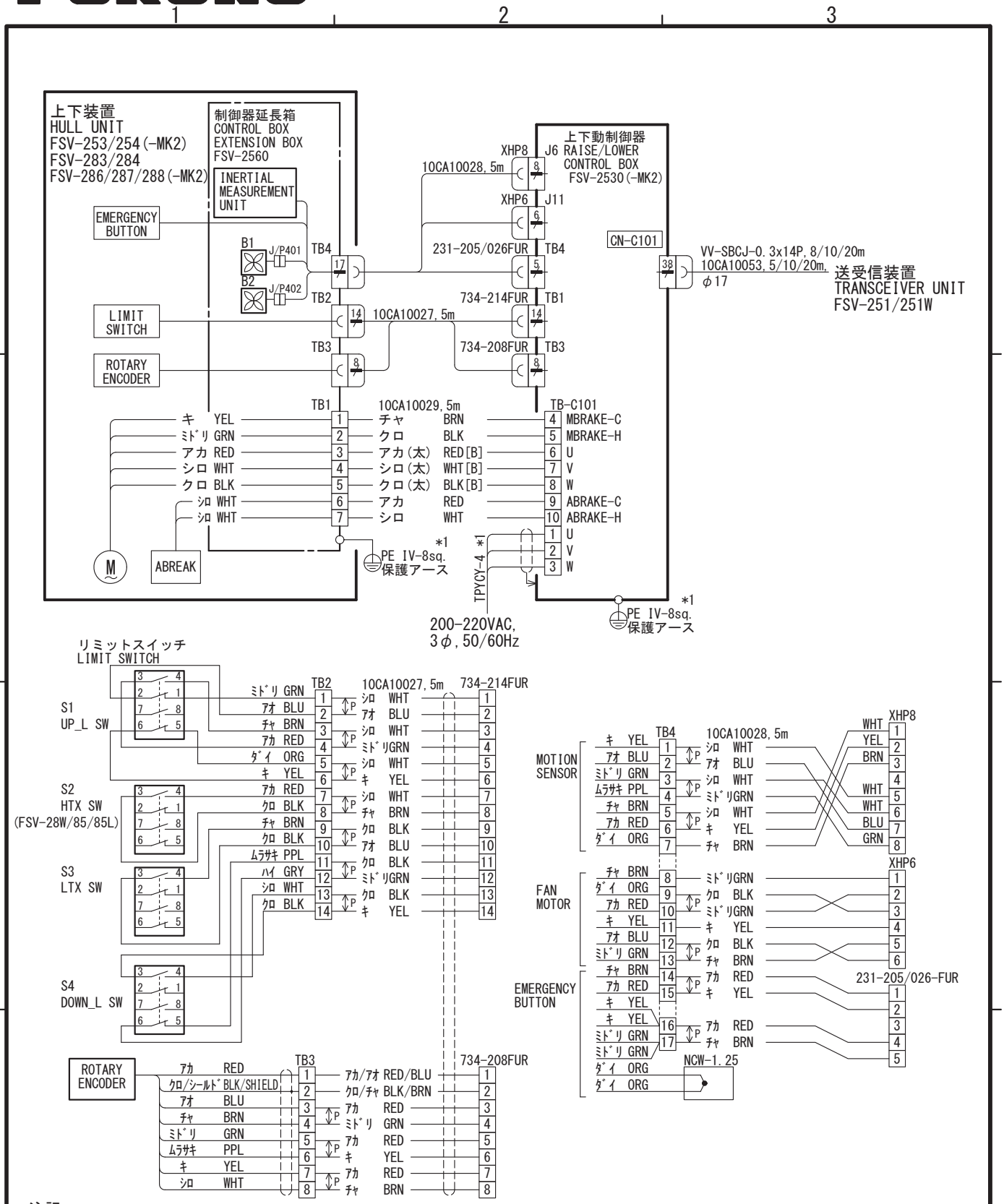

注記
＊１）造船所手配。

NOTE
*1: SHIPYARD SUPPLY.

DRAWN 24/Jan/2023 T. YAMASAKI		TITLE	FSV-2560
CHECKED 24/Jan/2023 H. MAKI		名称	制御器延長箱
APPROVED 2/Feb/2023 H.MAKI	FSV-25/28W(MARK-2)ser.		相互結線図
SCALE / MASS kg		NAME	CONTROL BOX EXTENSION BOX
DWG. No. C1344-C02- J	REF. No. 10-089-5001-6		INTERCONNECTION DIAGRAM